CLC 835 MC WH-SS Multi capsule and ground built-in coffee machine with 19 bar pump pressure and TFT display

Capsules | Ground coffee

DESCRIPTION	Multi capsule and ground built-in coffee machine with 19 bar pump pressure and TFT display
LIFE STYLE	Maestro
COLOURS	
REFERENCE	REF. 111630000 EAN. 8434778003833

CLC 835 MC WH-SS

FEATURES

Urban Colors Edition
Multi capsule and ground built-in coffee machine
Coffee size regulation
Touch control display with knobs
Capacity: 1 cup
Adjustable height system for different cup sizes
Milk frother and hot water pipe
Availability for ground coffee
3 storage drawers
19 bar pump pressure
1 litre water tank
Descaling function
Capsule adaptors suitable for:
Nespresso®,Lavazza®,Caffitaly®,E.S.E.

CLC 835 MC WH-SS

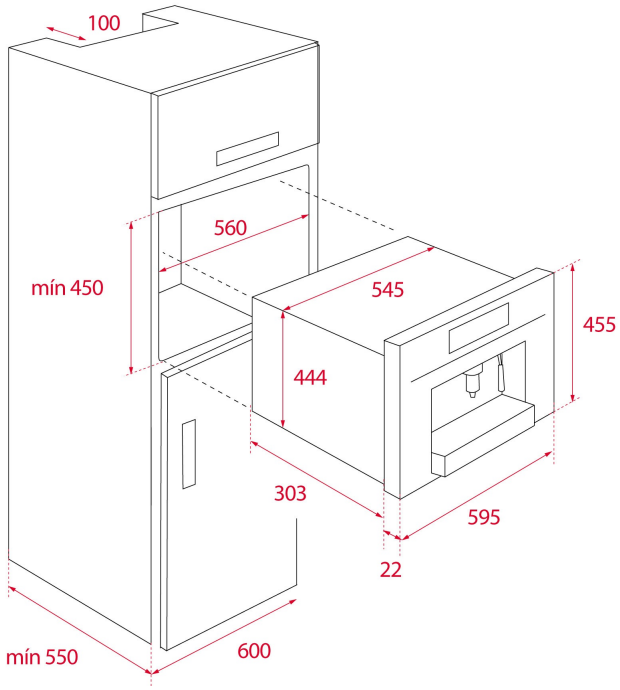

DIMENSIONS

Product height (mm): 455
Product width (mm): 595
Product depth (mm): 330
Product length (mm):
Net weight (Kg): 18,7

TECHNICAL DETAILS

FITTING MEASURES

Built-in Width (mm): 560
Built-in Depth (mm): 580
Built-in height (mm): 450

FEATURES

Type of installation: Built-in
Certificates: CE/CB
Pump pressure (Bar): 19
Control panel: TFT + 2 knobs
Fingerprint proof: Yes
Number of cups: 1
Retractable pipe for steam and hot water: Yes
Grinded coffee: Yes
Coffee capsules: Yes
On/Off function: Yes
Hot Water: Yes
Selected function indicator: Yes
Full water tank indicator: Yes