Classic 1B ½D 580 Inset stainless steel sink One bowl and half drainer

Antibacterial

Lifetime warranty

DESCRIPTION	Inset stainless steel sink One bowl and half drainer
LIFE STYLE	Total
COLOURS	
REFERENCE	REF. 40133224 EAN. 8421152105412

Classic 1B ½D 580

FEATURES

Classic Series
Stainless steel sink
One bowl and half drainer
Inset installation
3½" manual basket waste with siphon
150 mm deep bowl
45 cm base unit

Classic 1B ½D 580

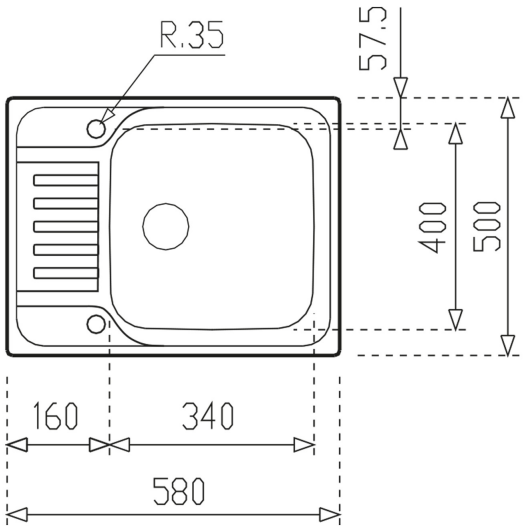

DIMENSIONS

Product height (mm):
Product width (mm): 500
Product depth (mm): 150
Product length (mm): 580
Net weight (Kg): 2,22

TECHNICAL DETAILS

MAIN BOWL	**Main Bowl Length (mm):** 340 **Main Bowl Width (mm):** 400 **Main Bowl Depth (mm):** 150
OTHER FEATURES	**Material:** Stainless Steel **Type of installation:** Inset **Number of tap holes:** 1 **Valve hole type:** 3½" **Overflow hole:** Round **Sink Bowl / Top thickness (mm):** 0,6
OTHERS	**Base unit (cm):** 45
SINK LAY OUT	**Number of bowls:** 1 **Number of drainers:** ½ **Drainer position:** Left

ACCESSORIES	**Soundproof:** Yes **Installation clips:** Yes **Siphon:** Yes