BE 2B 765 Undermount stainless steel sink with two bowls

200mm depth | Antibacterial | Lifetime warranty

DESCRIPTION	Undermount stainless steel sink with two bowls
COLOURS	
REFERENCE	REF. 10125150 EAN. 8421152112960

BE 2B 765

FEATURES

Space Series
Stainless steel sink
Two bowls
Undermount installation
3½" manual basket waste with overflow
200 mm deep bowls
80 cm base unit

BE 2B 765

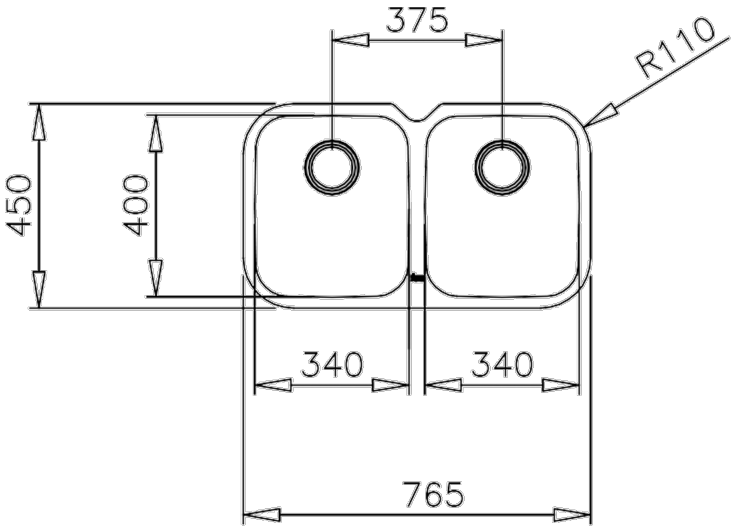

DIMENSIONS

Product height (mm):
Product width (mm): 450
Product depth (mm): 200
Product length (mm): 765
Net weight (Kg): 5,5

TECHNICAL DETAILS

MAIN BOWL	**Main Bowl Length (mm):** 340 **Main Bowl Width (mm):** 400 **Main Bowl Depth (mm):** 200
OTHER FEATURES	**Material:** Stainless Steel **Type of installation:** Undermount **Valve hole type:** 3½" **Overflow hole:** Round **Sink Bowl / Top thickness (mm):** 1,0
OTHERS	**Base unit (cm):** 80
SECONDARY BOWL	**Secondary Bowl Length (mm):** 340 **Secondary Bowl Width (mm):** 400 **Secondary Bowl Depth (mm):** 200

SINK LAY OUT	**Number of bowls:** 2 **Number of drainers:** 0
ACCESSORIES	**Soundproof:** Yes **Installation clips:** Yes