Frame FR97SXLF Top/Flush stainless steel sink One bowl and One drainer Right Hand

Antibacterial

Lifetime warranty

DESCRIPTION	Top/Flush stainless steel sink One bowl and One drainer Right Hand
LIFE STYLE	Maestro
COLOURS	
REFERENCE	REF. 40180611 EAN. 8421152067116

Frame FR97SXLF

FEATURES

Frame Series
Stainless steel sink
One bowl and one drainer
3-in-1 installation possibilities: top, flush or undermount
3½" automatic basket waste with siphon
180 mm deep bowl
60 cm base unit

Frame FR97SXLF

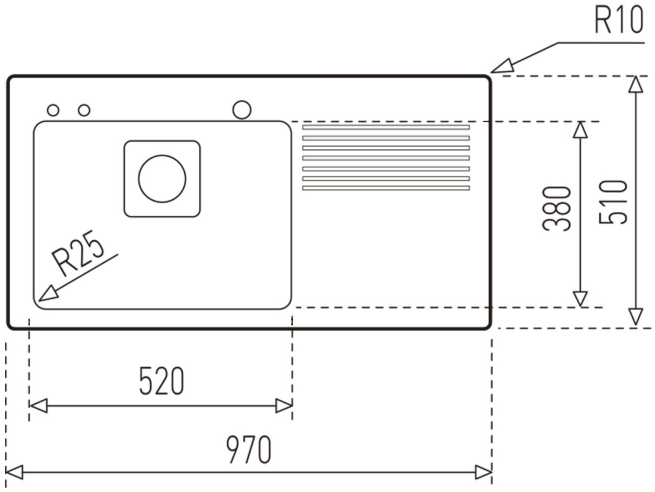

DIMENSIONS

Product height (mm):
Product width (mm): 510
Product depth (mm): 180
Product length (mm): 970
Net weight (Kg): 11

TECHNICAL DETAILS

MAIN BOWL	**Main Bowl Length (mm):** 520 **Main Bowl Width (mm):** 380 **Main Bowl Depth (mm):** 180
OTHER FEATURES	**Material:** Stainless Steel **Type of installation:** Flush,Inset,Undermount **Number of tap holes:** 3 **Valve hole type:** 3½" **Overflow hole:** Rectangular **Sink Bowl / Top thickness (mm):** 0,9
OTHERS	**Base unit (cm):** 60
SINK LAY OUT	**Number of bowls:** 1 **Number of drainers:** 1 **Drainer position:** Right

ACCESSORIES	**Soundproof:** Yes **Installation clips:** Yes **Siphon:** Yes