Deva 45 I-CN 1B 1D Recessed kitchen sink

Antibacterial

DESCRIPTION	Recessed kitchen sink
LIFE STYLE	Easy
COLOURS	
REFERENCE	REF. 10133005 EAN. 8421152118184

Deva 45 I-CN 1B 1D

FEATURES

Stainless steel sink
One bowl and one drainer
Inset installation
1½" manual waste
150 mm deep bowl
45 cm base unit

Deva 45 I-CN 1B 1D

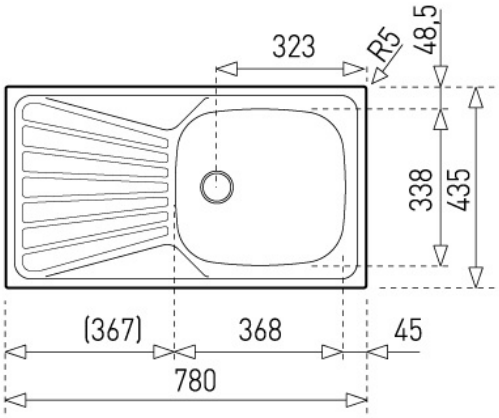

DIMENSIONS

Product height (mm):
Product width (mm): 435
Product depth (mm): 150
Product length (mm): 780
Net weight (Kg): 2

TECHNICAL DETAILS

MAIN BOWL	**Main Bowl Length (mm):** 368 **Main Bowl Width (mm):** 338 **Main Bowl Depth (mm):** 150
OTHER FEATURES	**Material:** Stainless Steel **Type of installation:** Inset **Valve hole type:** 1½" **Overflow hole:** Round **Sink Bowl / Top thickness (mm):** 0,5
OTHERS	**Base unit (cm):** 45
SINK LAY OUT	**Number of bowls:** 1 **Number of drainers:** 1 **Drainer position:** Reversible

ACCESSORIES	**Soundproof:** Yes **Installation clips:** Yes