ForLinea RS15 2B 580 AUTO 3-in1 Installation stainless steel sink with two bowls

200mm depth | Antibacterial | Lifetime warranty + SilentSmart | R15, easy to clean

DESCRIPTION	3-in1 Installation stainless steel sink with two bowls
COLOURS	
REFERENCE	REF. 115030013 EAN. 8434778004441

ForLinea RS15 2B 580 AUTO

FEATURES

ForLinea Series
Stainless steel sink
Two bowls
2-in-1 installation possibilities: top or flush
Easy clean radius R15 corners
3½" SQ automatic basket waste with siphon
Decorative SQ cover
SilentSmart, 50% less noise
200 and 140 mm deep bowls
60 cm base unit

ForLinea RS15 2B 580 AUTO

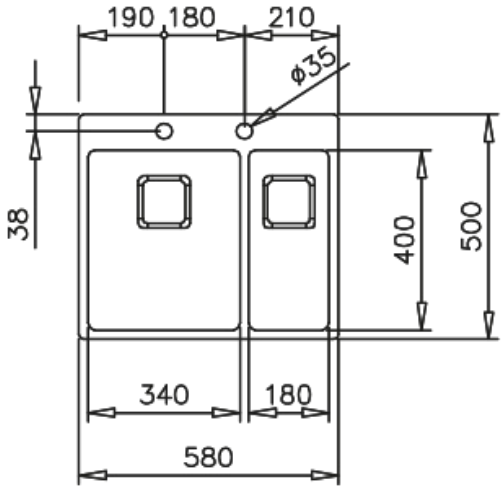

DIMENSIONS

Product height (mm):
Product width (mm): 500
Product depth (mm): 200
Product length (mm): 580
Net weight (Kg): 5,38

TECHNICAL DETAILS

MAIN BOWL	**Main Bowl Length (mm):** 340 **Main Bowl Width (mm):** 400 **Main Bowl Depth (mm):** 200
OTHER FEATURES	**Material:** Stainless Steel **Type of installation:** Top,Flush **Number of tap holes:** 2 **Valve hole type:** 3½" SQUARED **Overflow hole:** Rectangular **Sink Bowl / Top thickness (mm):** 1,0
OTHERS	**Base unit (cm):** 60
SECONDARY BOWL	**Secondary Bowl Length (mm):** 180 **Secondary Bowl Width (mm):** 400 **Secondary Bowl Depth (mm):** 140
SINK LAY OUT	**Number of bowls:** 2 **Number of drainers:** 0
ACCESSORIES	**Soundproof:** Yes

SilentSmart: Yes
Installation clips: Yes
Siphon: Yes