840.560 (33.22) 2B 8 Inset stainless steel sink two bowls

Antibacterial

Lifetime warranty

DESCRIPTION	Inset stainless steel sink two bowls
LIFE STYLE	Total
COLOURS	
REFERENCE	REF. 40136534 EAN. 8421152161258

840.560 (33.22) 2B 8

FEATURES

Diverse Series
Stainless steel sink
Two bowls
Inset installation
3½" manual waste without overflow
204 mm deep bowls
80 cm base unit

840.560 (33.22) 2B 8

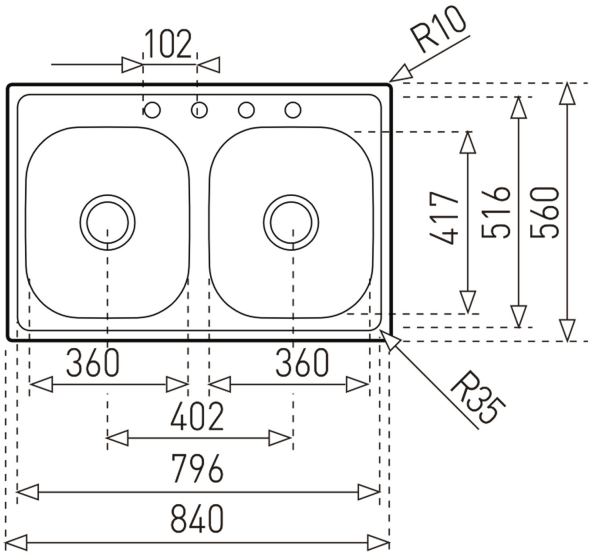

DIMENSIONS

Product height (mm):
Product width (mm): 560
Product depth (mm): 204
Product length (mm): 840
Net weight (Kg):

TECHNICAL DETAILS

MAIN BOWL	**Main Bowl Length (mm):** 360 **Main Bowl Width (mm):** 417 **Main Bowl Depth (mm):** 204
OTHER FEATURES	**Material:** Stainless Steel **Type of installation:** Inset **Number of tap holes:** 1 **Overflow hole:** No **Sink Bowl / Top thickness (mm):** 0,9
SECONDARY BOWL	**Secondary Bowl Length (mm):** 360 **Secondary Bowl Width (mm):** 417 **Secondary Bowl Depth (mm):** 204
SINK LAY OUT	**Number of bowls:** 2 **Number of drainers:** 0