# **LP2 140** Free Standing Compact Dishwasher for 6 place settings in 55cm

ECO function

| | |
|---|---|
| **DESCRIPTION** | Free Standing Compact Dishwasher for 6 place settings in 55cm |
| **LIFE STYLE** | Total |
| **COLOURS** | |
| **REFERENCE** | REF. 40782910<br>EAN. 8421152144596 |

# LP2 140

**FEATURES**

Free-standing table top dishwasher
Place settings: 6
Washing programs: 6
Washing temperatures: 40°, 45°, 50°, 60°, 65°, 70°C
Fast program 30 minutes
Eco Program
Delay timer 1-24 hours
Energy Class: A+/A
Noise level: 49 dBA

# LP2 140

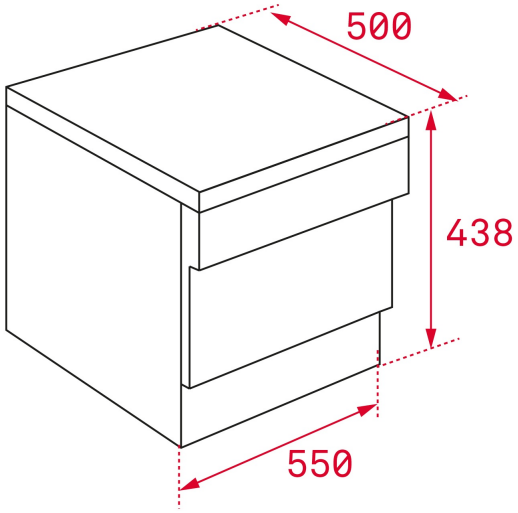


## DIMENSIONS

**Product height (mm):** 438
**Product width (mm):** 550
**Product depth (mm):** 500
**Product length (mm):**
**Net weight (Kg):** 21

## TECHNICAL DETAILS

### PRODUCT SHEET

**Capacity (Place Settings):** 6
**Energy consumption (kWh/year):** 174
**Power consumption (Kwh):** 0,609
**Water consumption (litres/year):** 1820
**Water consumption (litres):** 6.5
**Standard program:** ECO
**Standard cycle duration (minutes):** 180
**Noise level (dB):** 49
**Certificates:** GS;CE;EMC;Rohs;SAA

### POWER SUPPLY

**Frequency (Hz):** 50
**Power rate (V):** 220-240
**Power rate (W):** 1280
**Plug type:** EU
**Maximum Nominal Power (W):** 1280

### FEATURES

**Type of installation:** Table top
**Control panel:** Electronic buttons
**Control panel display:** Yes

**Number of programs:** 6
**Number Of Washing Temperatures:** 6
**Water softener:** Yes
**Microfilter:** Yes

## SAFETY SYSTEMS

**Internal Leakage Control:** Yes

## CONTROL INDICATOR LIGHTS

**Low Salt Aid indicator:** Yes
**Low Rinse Aid indicator:** Yes
**Selected program indicator:** Yes
**Remaining time:** Yes

## SPECIAL FUNCTIONS

**Fast program:** Yes
**Fast program (minutes):** 30
**Economic program:** Yes
**Delayed Timer (h):** 1-24 HOURS

# LP2 140
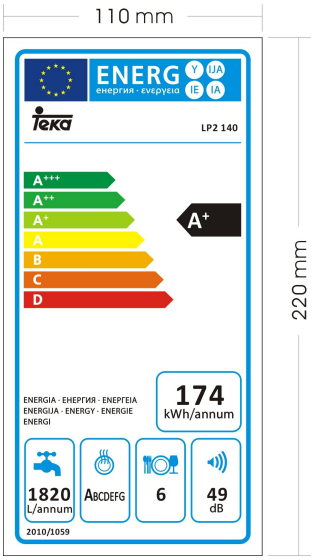
## ENERGY LABEL