ForSquare 50.40 TG AUTO Inset Tegranite Sink with one bowl

Main bowl depth: 200mm | High quality colour intensity | Easy to clean | Food safe | Scratch Proof

DESCRIPTION	Inset Tegranite Sink with one bowl
LIFE STYLE	Maestro
COLOURS	
REFERENCE	REF. 115230009 EAN. 8434778007121

ForSquare 50.40 TG AUTO

FEATURES	Tegranite+ sink One bowl Inset installation 3½" automatic basket waste with siphon 200 mm deep bowl 60 cm base unit

ForSquare 50.40 TG AUTO

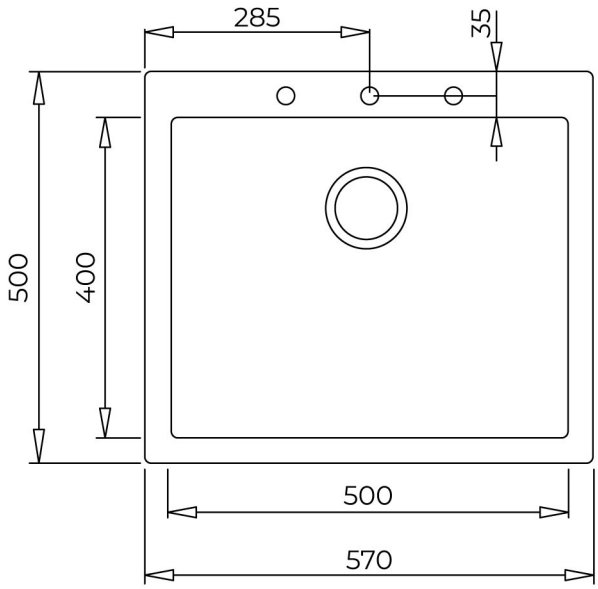

DIMENSIONS

Product height (mm):
Product width (mm): 500
Product depth (mm): 200
Product length (mm): 570
Net weight (Kg): 10,3

TECHNICAL DETAILS

MAIN BOWL	**Main Bowl Length (mm):** 500 **Main Bowl Width (mm):** 400 **Main Bowl Depth (mm):** 200
OTHER FEATURES	**Material:** Tegranite+ **Type of installation:** Inset **Number of tap holes:** Pre-Drilled **Valve hole type:** 3½" **Overflow hole:** Round **Sink Bowl / Top thickness (mm):** 8,0
OTHERS	**Base unit (cm):** 60
SINK LAY OUT	**Number of bowls:** 1 **Number of drainers:** 0
ACCESSORIES	**Installation clips:** Yes

Siphon: Yes