EX 60.1 4G AI AL CI 60cm Gas Hob with 4 high efficiency cooking zones and cast iron grids of butane gas

Integrated auto-ignition system

Autolock

DESCRIPTION	60cm Gas Hob with 4 high efficiency cooking zones and cast iron grids of butane gas
LIFE STYLE	Total
COLOURS	
REFERENCE	REF. 40212001 EAN. 8421152144701

EX 60.1 4G AI AL CI

FEATURES

Gas hob
Frontal knobs
High Efficiency burners
4 cooking zones:
1 fast burner (2.8 kW)
2 semi-fast burner (1.75 kW)
1 auxiliary burner (1 kW)
Cast iron grids with a professional look
Auto-lock safety device
Auto–ignition
Type of gas : LPG (butane/propane)

EX 60.1 4G AI AL CI

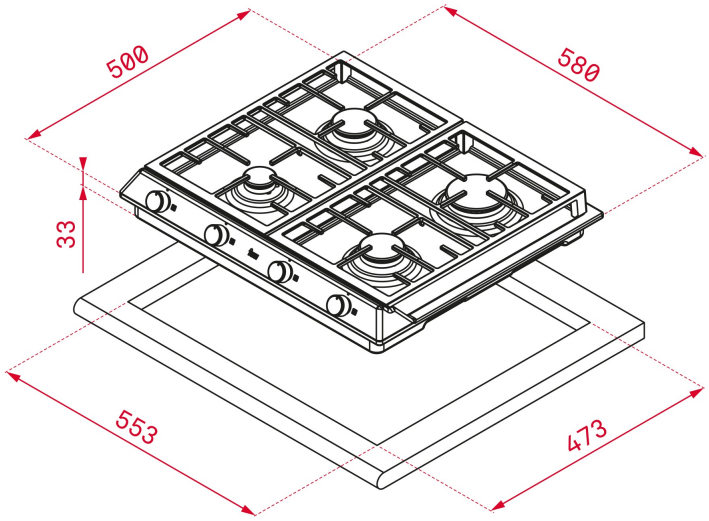

DIMENSIONS

Product height (mm): 84
Product width (mm): 580
Product depth (mm): 500
Product length (mm):
Net weight (Kg): 9,4

TECHNICAL DETAILS

FITTING MEASURES	**Built-in Width (mm):** 553 **Built-in Depth (mm):** 473 **Built-in height (mm):** 32
FEATURES	**Gas type:** Butane **Maximum nominal power (W) (Gas):** 7300 **Autoignition:** Yes
ELECTRIC CONNECTION	**Frequency (Hz):** 50/60 **Power rate (V):** 220-240 **Cable Connection Length (cm):** 100
COOKING ZONES	**Cooking Zones:** 4
SAFETY SYSTEMS	**Automatic safety disconnection (Auto Lock) (Gas):** Yes

FINISH	**Surface finishing:** Brushed stainless steel **Surface type:** Stainless Steel
ACCESSORIES	**Grid type:** Full Grid **Wok support:** Optional **Junction Kit:** NO **Cast Iron Grids:** Yes **Teppan Yaki:** NO