TL 9310 90cm Pull-out Hood with doble motor turbine and 2 speeds

LED

LED lighting

DESCRIPTION	90cm Pull-out Hood with doble motor turbine and 2 speeds
LIFE STYLE	Easy
COLOURS	
REFERENCE	REF. 40474390 EAN. 8421152146002

TL 9310

FEATURES

Pull-out hood
Mechanical control panel
2 speeds
Exhaust capacities:
Free Outlet, m^3/h: 366
Max., m3/h: 332
Min., m^3/h: 233
Noise (LwA) Max Speed, dB: 65
Noise (LwA) Min Speed, dB: 56
2 Integrated LED lamps
4 aluminium filters
Automatic Lighting
Exchangeable Front Panel

TL 9310

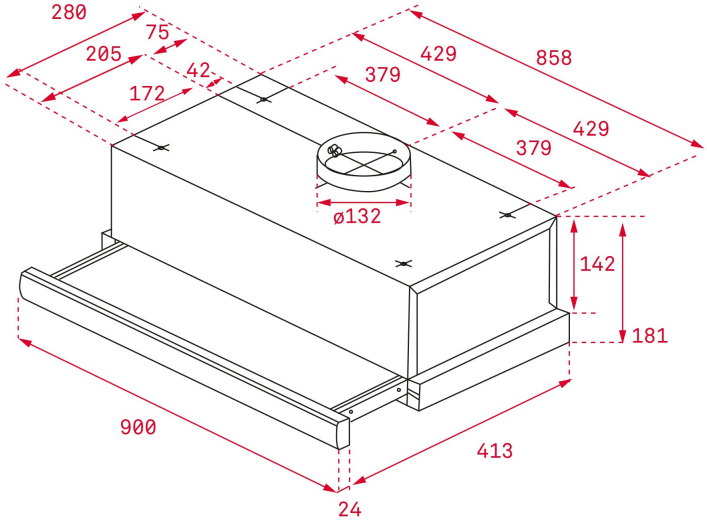

DIMENSIONS

Product height (mm): 181
Product width (mm): 900
Product depth (mm): 304-437
Product length (mm):
Net weight (Kg): 9,1

TECHNICAL DETAILS

FEATURES

Certificates: CE; CB; Rohs
Ø Outlet (mm): 120
Type of inner light: LED
Inside light Consumption (W): 6
Plug type: European plug
Power rate (V): 230
Frequency (Hz): 50
Total hood power (W): 146
Number of motors: 2
Motor power (W): 130
Air flow (Qmin) m3/h: 160
Air flow (Qmax): 304

ACCESSORIES

Anti Return valve: Yes
Outlet extension: no
Optional Charcoal Filter: CNL 1C

MODELS

Number of filters: 2
Filter description: Aluminium

Control panel: Mechanical
Automatic lighting: Yes
Number of speeds: 2

TL 9310
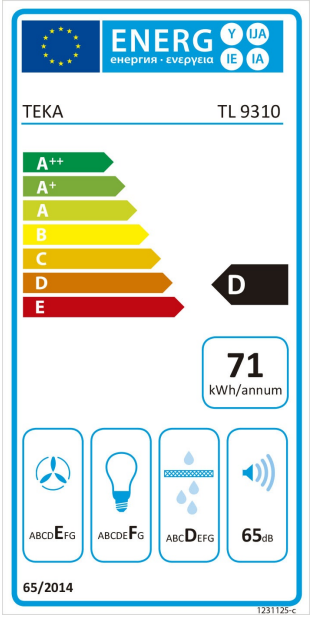
ENERGY LABEL