IZS 34600 DMS VarioPro Series 30cm Modular Induction Hob with Slide Cooking system and 4 zones

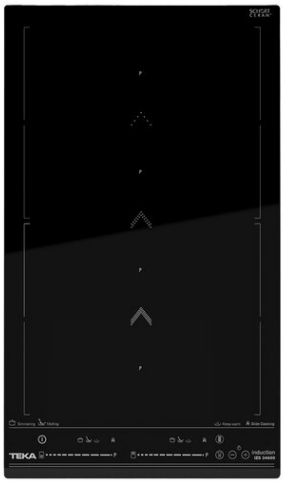

MultiSlider, for independant control of each cooking zone

Autolock

Power function

Power Plus function

Easy installation system

DESCRIPTION	VarioPro Series 30cm Modular Induction Hob with Slide Cooking system and 4 zones
LIFE STYLE	Maestro
COLOURS	
REFERENCE	REF. 112500000 EAN. 8434778000894

IZS 34600 DMS

FEATURES

Modular induction hob
FLEX induction with SlideCooking function
Touch Control Slider
Cooking timer
4 induction zones (2 + Slide Flex + Flex combined)
-1 Slide Flex zone 230 x 400 mm
-1 Flex zone 230 x 400 mm
-2 zones 230 x 200 mm
Special cooking functions: Simmering, Melting and Keep warm
Slide Cooking function
Power Plus function
Silence mode
Fast-Click easy installation
Maximum nominal power: 3.500 W

IZS 34600 DMS

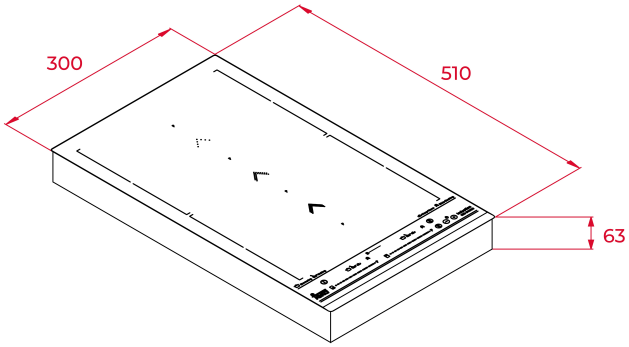

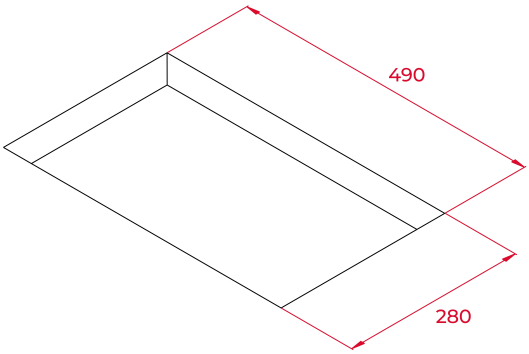

DIMENSIONS

Product height (mm): 63
Product width (mm): 300
Product depth (mm): 510
Product length (mm):
Net weight (Kg): 6,915

TECHNICAL DETAILS

FITTING MEASURES	**Built-in Width (mm):** 280 **Built-in Depth (mm):** 490 **Built-in height (mm):** 63
FEATURES	**Number of electric power levels:** 9 **Simmering:** Yes **Melting:** Yes **Keeping warm:** Yes **Power management function:** Yes
ELECTRIC CONNECTION	**Frequency (Hz):** 50/60 **Power rate (V):** 220-240 **Cable Connection Length (cm):** 110 **Maximum Nominal Power (W) (Electric hob):** 3500

COOKING ZONES	**Cooking Zones:** 2 **Energy consumption for the whole hob, Wh/Kg:** 192,9
SAFETY SYSTEMS	**Residual heat indicator (Gas):** Yes **Residual heat indicator (Electric hob):** Yes **Automatic safety disconnection (Auto Lock) (Electric hob):** Yes **Child lock:** Yes
FINISH	**Surface finishing:** Front bevelled glass **Surface type:** Ceramic Glass (4mm) **Easy installation system:** Yes
ACCESSORIES	**Junction Kit:** Optional **Teppan Yaki:** Optional