INCA INCA

DESCRIPTION	INCA
LIFE STYLE	Inca
COLOURS	
REFERENCE	REF. 5310112 EAN. 8413509201434

INCA

FEATURES	Bath/Shower mixer Without shower set Noise reduction system Anti-scale aerator

TEKA

INCA

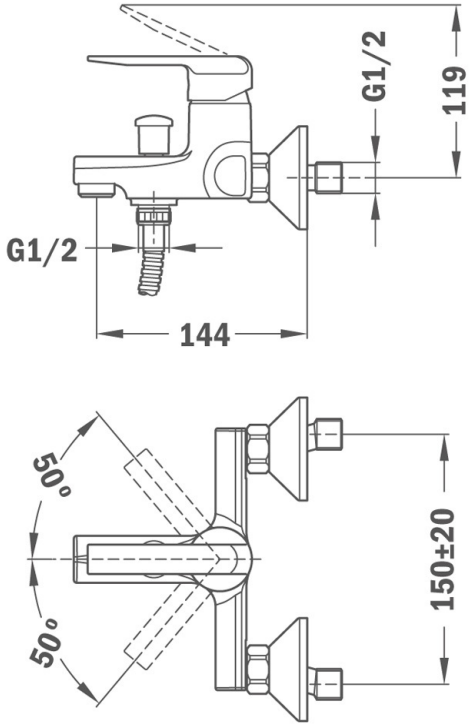

DIMENSIONS

Product height (mm):
Product width (mm):
Product depth (mm):
Product length (mm):
Net weight (Kg):

TECHNICAL DETAILS

MODELS	**Type of installation:** Wall-mounted