INCA INCA

DESCRIPTION	INCA
LIFE STYLE	Inca
COLOURS	
REFERENCE	REF. 5324112 EAN. 8413509204350

INCA

FEATURES	1 ways concealed mixer Without shower set Concealed part included 40 mm cartridge

TEKA

INCA

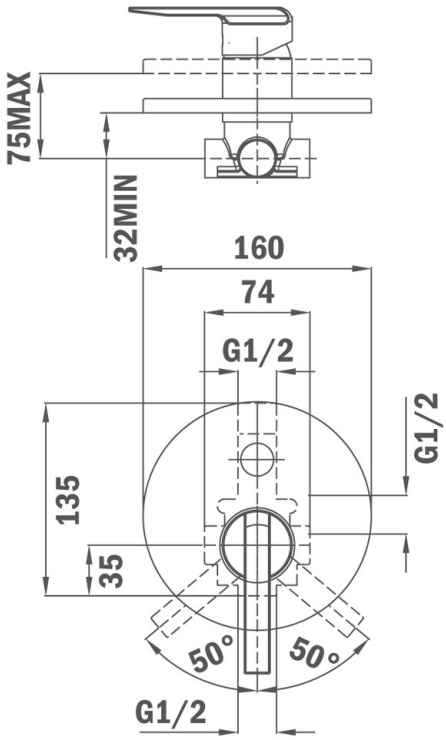

DIMENSIONS

Product height (mm):
Product width (mm):
Product depth (mm):
Product length (mm):
Net weight (Kg):

TECHNICAL DETAILS

MODELS	**Type of installation:** Wall-mounted