TKD 1480 INOX 8kg A+++ Free-standing Washing Machine with Woolmark certification

Woolmark Certificate | Hand wash program | Quick cycle program | 8Kg washing capacity

DESCRIPTION	8kg A+++ Free-standing Washing Machine with Woolmark certification
LIFE STYLE	Maestro
COLOURS	
REFERENCE	REF. 40874442 EAN. 8421152131916

TKD 1480 INOX

FEATURES

Free standing washing machine
Washing capacity: 8 Kg
16 washing programs
Woolmark certification
Maximum spin speed: 1400 rpm
Electronic control panel
LCD display
Fast program 15 minutes
My Cycle program
Special Programs wool and baby care
Delay timer 1-24h
Balance control system
Locking system in case of lack of water or electricity
Foam control system
32 cm wide porthole
Energy class: A+++/B

TKD 1480 INOX

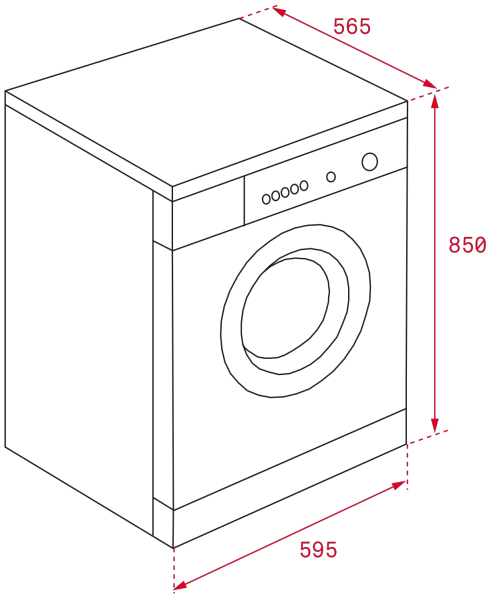

DIMENSIONS

Product height (mm): 850
Product width (mm): 595
Product depth (mm): 565
Product length (mm):
Net weight (Kg): 66

TECHNICAL DETAILS

PRODUCT SHEET

Type of installation: Free standing
Energy consumption (kWh/year): 196
Water consumption (litres/year): 11000
Certificates: CE + Reach + ERP

POWER SUPPLY

Frequency (Hz): 50
Power rate (V): 220-240
Maximum Nominal Power (W): 2000
Nominal power motor (W): 500
Power of heating element (W): 1800

FEATURES

Stainless Steel Drum: Yes
Glass door diameter (cms): 32
Number of programs: 16
Number Of Washing Temperatures: 0-20-30-40-60-90
Control panel: ELECTRONIC
Electronic washing management: Yes
Child lock: Yes
Auto lock door: Yes

Cancel spin cycle button: Yes
Fingerprint proof stainless steel: Yes

CONTROL INDICATOR LIGHTS

Selected program indicator: Yes
Remaining time: Yes
Extra rinse indicator: Yes

SPECIAL FUNCTIONS

Fast program: Yes
Fast program (minutes): 15
Economic program: Yes
Intense program: Yes
Delayed Timer (h): 1-24 hours
Extra rinse: Yes
Delicate fabrics: Yes
Quick Wash: Yes

EQUIPMENT

Adjustable Feet Back: Yes
Adjustable feet front: Yes

TKD 1480 INOX
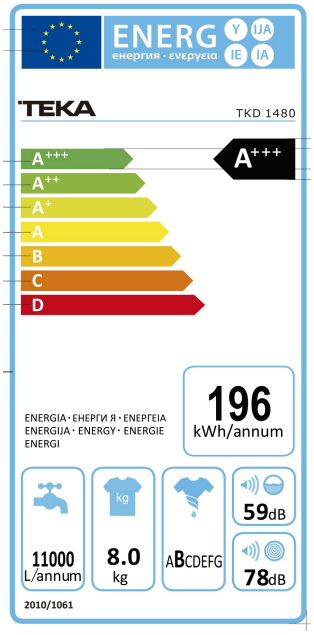
ENERGY LABEL