LCB 14620 GB Compact dishwasher with table top installation

ECO function

DESCRIPTION	Compact dishwasher with table top installation
LIFE STYLE	Total
COLOURS	
REFERENCE	REF. 114340000 EAN. 8434778003536

LCB 14620 GB

FEATURES

Freestanding compact dishwasher
Capacity: 6 settings
7 Washing programs
Electronic control panel with LED display
Washing temperatures: 40°, 45°, 50°,60°, 65°, 70°C
Delay timer 1-24 hours
Eco Program, Fast program 15 minutes
Indicator lights: ON/OFF, rinse-aid, salt, time remaining and selected program
Energy Class: A+
Water consumption: 6.5L (economic program)

LCB 14620 GB

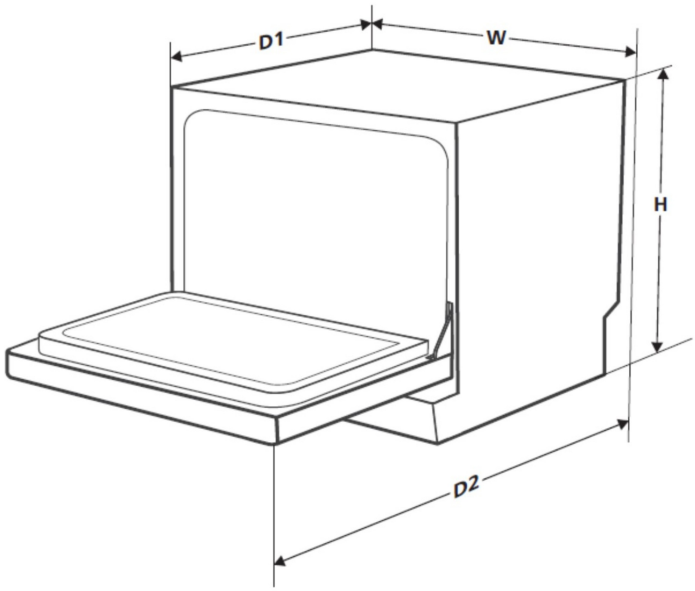

DIMENSIONS

Product height (mm): 438
Product width (mm): 550
Product depth (mm): 500
Product length (mm):
Net weight (Kg): 21

TECHNICAL DETAILS

PRODUCT SHEET

Capacity (Place Settings): 6
Energy consumption (kWh/year): 174
Power consumption (Kwh): 0,61
Water consumption (litres/year): 1820
Water consumption (litres): 6.5
Standard program: ECO
Standard cycle duration (minutes): 180
Noise level (dB): 49
Certificates: CB/GS/CE/EMC

POWER SUPPLY

Frequency (Hz): 50
Power rate (V): 220-240
Power rate (W): 1280
Plug type: EU
Maximum Nominal Power (W): 1280

FEATURES

Type of installation: Table top
Control panel: Electronic buttons
Control panel display: Yes

Number of programs: 7
Number Of Washing Temperatures: 6
Water softener: Yes
Microfilter: Yes

SAFETY SYSTEMS

Internal Leakage Control: Yes

CONTROL INDICATOR LIGHTS

Low Salt Aid indicator: Yes
Low Rinse Aid indicator: Yes
Selected program indicator: Yes
Remaining time: Yes

SPECIAL FUNCTIONS

Soak/Prewash program: Yes
Economic program: Yes
Intense program: Yes
Delayed Timer (h): 1-24 hours