CNL 6415 60cm Pull-out Hood with ECOPOWER motor and and 2+1 speeds

LED lighting

Stop delay timer

DESCRIPTION	60cm Pull-out Hood with ECOPOWER motor and and 2+1 speeds
LIFE STYLE	Total
COLOURS	
REFERENCE	REF. 40436810 EAN. 8421152146170

CNL 6415

FEATURES

Pull-out hood
EcoPower motor
Energy Efficiency class: A
Electronic control panel
5+1 speeds
Exhaust capacities:
Free Outlet, m³/h: 393
Qboost, m3/h: 385
Max., m3/h: 293
Min., m³/h: 141
Noise (LwA) Boost Speed, dB: 69
Noise (LwA) Max Speed, dB: 63,9
Noise (LwA) Min Speed, dB: 51,6
1 LED bar
2 stainless Steel filters MMX
Reinforced Black Glass upper structure
Automatic Lighting
Exchangeable Front Panel
Finger Print Proof Front Panel (SS)

CNL 6415

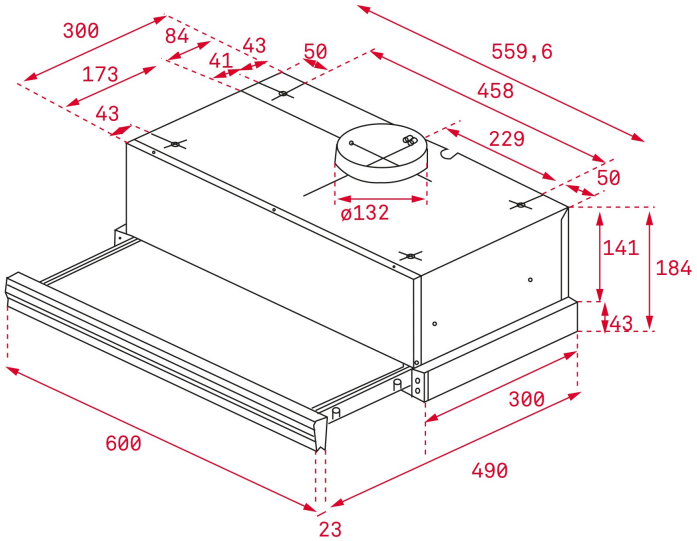

DIMENSIONS

Product height (mm): 184
Product width (mm): 600
Product depth (mm): 300/490
Product length (mm):
Net weight (Kg): 7,1

TECHNICAL DETAILS

FEATURES

Certificates: CE; CB; Rohs
Ø Outlet (mm): 120
Type of inner light: LED
Inside light Consumption (W): 1,5
Plug type: European plug
Power rate (V): 230
Frequency (Hz): 50
Total hood power (W): 113
Number of motors: 1
Motor power (W): 110
Air flow (Qmin) m3/h: 226
Air flow (Qmax): 312
Air flow (Qboost): 385

ACCESSORIES

Anti Return valve: Yes
Outlet extension: No
Optional Charcoal Filter: CNL 1C

MODELS

Number of filters: 2

Filter description: Stainless Steel filters
Control panel: Electronic
Stop delay timer: Yes
Automatic lighting: Yes
Number of speeds: 2+1
Fingerprint proof front panel: Yes

CNL 6415
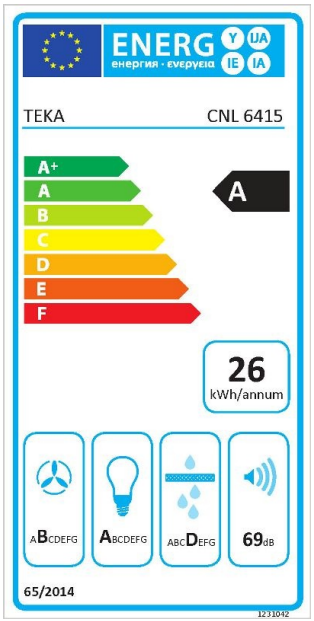
ENERGY LABEL