VS 152 GS Vacuum sealing machine with kitchen scale and soft-close

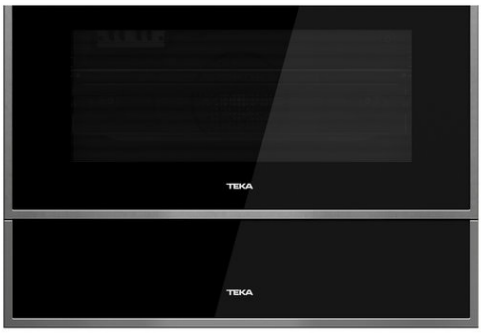

DESCRIPTION	Vacuum sealing machine with kitchen scale and soft-close
LIFE STYLE	Maestro
COLOURS	
REFERENCE	REF. 40589951 EAN. 8421152145630

VS 152 GS

FEATURES

Vacuum sealing machine
Kitchen scale with protective cover
Roll holder for aluminum film
Roll holder for transparent film
Place to store accessories
Self-closing
Soft-close
To combine with Compact Ovens & Mwo

VS 152 GS

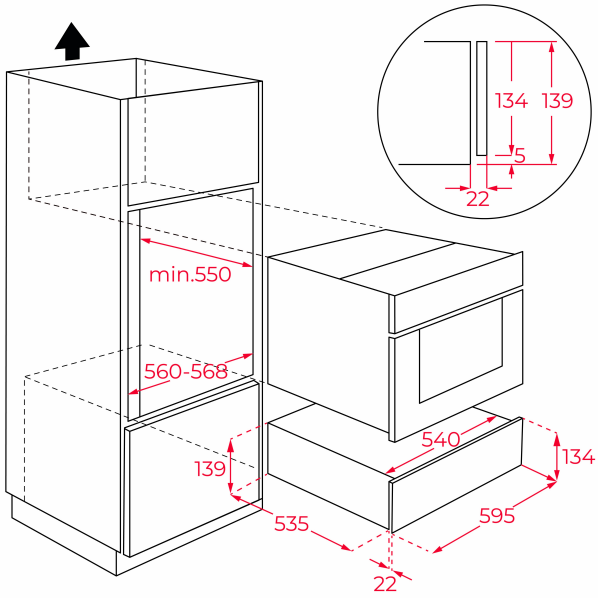

DIMENSIONS

Product height (mm): 140
Product width (mm): 595
Product depth (mm): 557
Product length (mm):
Net weight (Kg): 18

TECHNICAL DETAILS

FEATURES	**Certificates:** CE **Number of cavities:** 2 **Number of guide levels:** 0 **Number of guide levels (lower cavity):** 0 **Door handle:** Push-pull
ELECTRIC CONNECTION	**Maximum Nominal Power (W):** 115 **Frequency (Hz):** 50 **Power rate (V):** 220-240 **Cable Connection Length (cm):** 110 **Plug:** Yes **Plug type:** Schuko