TG1 80 EU
Free standing under-counter mini freezer with reversible door

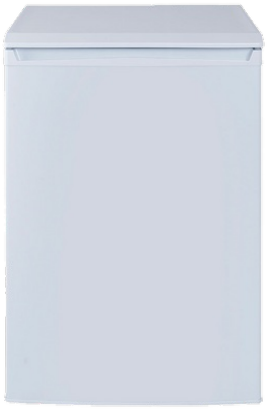

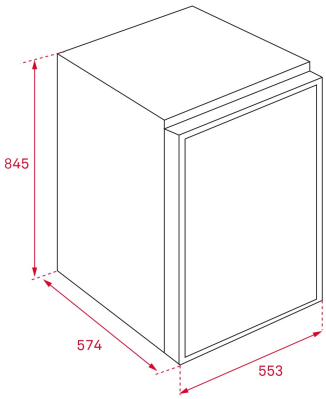

REFERENCE

REF: 40670410 EAN: 8421152134030

FEATURES

Free Standing table top freezer
Manual defrost
Manual adjustable thermostat
Front adjustable feet
Reversible doors
Climate class: N/ST
Total capacity (gross/net): 94 / 84 litres
Ice cube tray included

DIMENSIONS

Product height (mm): 845
Product width (mm): 553
Product depth (mm): 574
Product length (mm):
Net weight (Kg): 29

TECHNICAL DETAILS

Energy efficiency class (UE 2019/2016): A+
Climate Class: ST/N
Energy Consumption (Kw/day): 0,48
Annual Consumption (kWh/year): 176
Freezing Capacity: 6
Noise Level (dBA): 39
Power rate (V): 220-240
Frequency (Hz): 50

COLOURS

40670410 White