# HLB 860 P BK-SS

Multifunction pyrolytic oven with 20 recipes and 12 cooking functions

70L

Full extension guides: 100% extraction

HydroClean steam cleaning system

Pyrolysis cleaning system

SoftClose

SurroundTemp

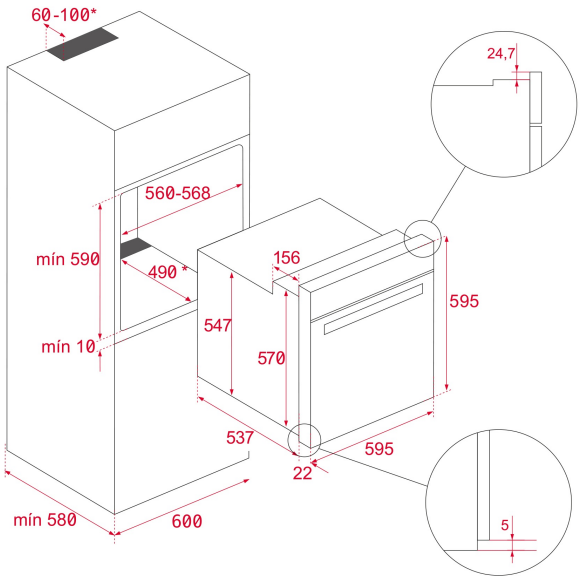


## REFERENCE

REF: 41566020 EAN: 8421152148822

## FEATURES

Multifunction SurroundTemp oven
12 cooking functions
Pyrolysis self-cleaning system and automatic HydroClean system
Touch control display with knobs
Electronic timer (Delay/Start function)
Personal cooking assistant: 20 automatic programs
Chrome supports with 5 cooking levels
Full-extension telescopic guides
Plus-extension telescopic guides
Removable quadruple glazed door
SoftClose system
Automatic disconnection safety system
Children safety lock
Automatic quick preheating
Anti-tip deep tray and reinforced grid
Capacity (gross/net): 71 / 70 litres

## DIMENSIONS

**Product height (mm):** 595
**Product width (mm):** 595
**Product depth (mm):** 537+22
**Product length (mm):**
**Net weight (Kg):** 37

## TECHNICAL DETAILS

Energy Efficiency Class: A+
Power rate (V): 220-240
Frequency (Hz): 50/60
Maximum Nominal Power (W): 3552

## COLOURS

41566020 Black glass with frame