MAESTRO **INTEGRA 66750 POS IX**

Built-in hood in 60 cm

LED

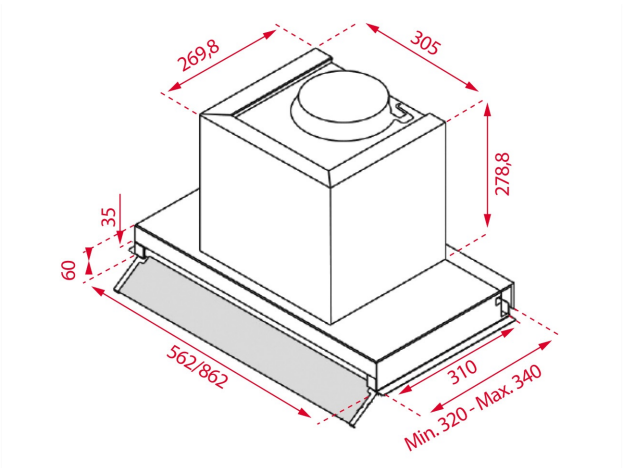

REFERENCE

REF: 113100000 EAN: 8434778014808

FEATURES

Built-in hood
Rotary knob control
3 speeds
Free Outlet exhaust capacity (m3/h): 630
Max speed exhaust capacity (m3/h): 620
Min speed exhaust capacity (m3/h): 225
Max speed sound level (dBA): 70
Min speed sound level (dBA): 50
2 LED Lamp
1 Aluminium filter
Anti-return valve included
Outlet reduction included
Optional Charcoal Filter: D9C

DIMENSIONS

Product height (mm): 339
Product width (mm): 594
Product depth (mm): 310
Product length (mm):
Net weight (Kg): 8,8

TECHNICAL DETAILS

Energy Efficiency Class: A
Noise (LwA) Min Speed (dB): 50
Noise (LwA) Max Speed (dB): 70
Noise (LwA) Boost Speed (dB): NA
Ø Outlet (mm): 150

COLOURS

113100000 Stainless Steel