TOTAL **HSB 630 P WH**

Multifunction pyrolytic oven with 8 cooking functions and plus extension guides

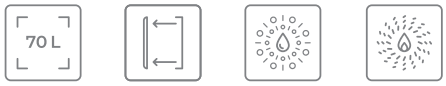

70L | Plus extension guides: 75% extraction | HydroClean steam cleaning system | Pyrolysis cleaning system

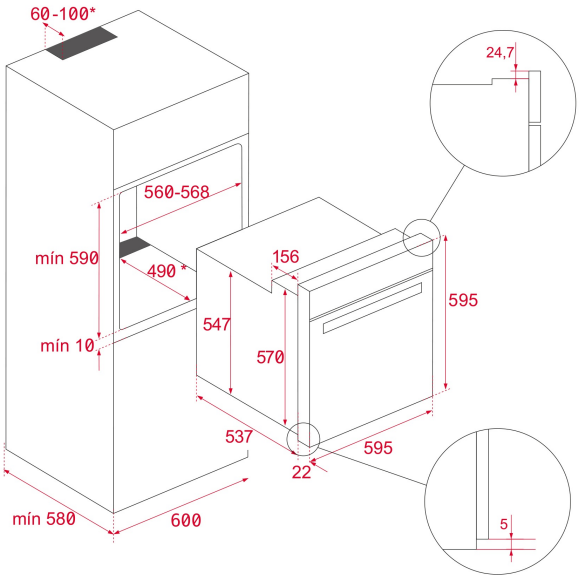

REFERENCE

REF: 41566051 EAN: 8421152148877

FEATURES

Multifunction oven
8 cooking functions
Pyrolysis self-cleaning system and automatic HydroClean system
Touch control display with knobs
Electronic timer (Delay/start function)
Chrome supports with 5 cooking levels
Plus-extension telescopic guides
Removable triple glazed door
Children safety lock
Manual quick preheating
Anti-tip deep tray
Capacity (gross/net): 71 / 70 litres

DIMENSIONS

Product height (mm): 595
Product width (mm): 595
Product depth (mm): 537+22
Product length (mm):
Net weight (Kg): 34

TECHNICAL DETAILS

Energy Efficiency Class: A+
Power rate (V): 220-240
Frequency (Hz): 50/60
Maximum Nominal Power (W): 3552

COLOURS

41566051 White

41566050 Black