MB 620 BI WH

Built-in mechanical microwave with automatic defrosting mode

Defrost By Time

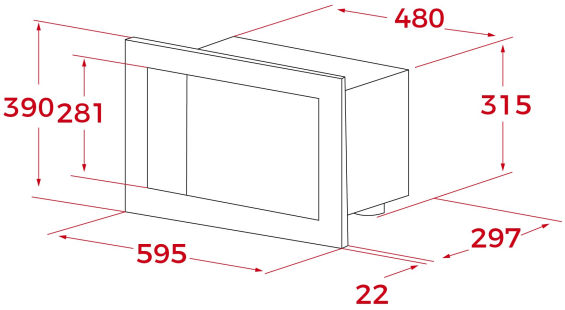

REFERENCE

REF: 40584001 EAN: 8421152145609

FEATURES

Built-in Microwave
1 cooking function
5 power levels, 1200 W
Defrost by time
Mechanical control knobs
Double glazed door with left opening
Automatic disconnection when open door
Stainless steel (fingerprint proof)
Capacity (gross/net): 18 / 20 litres
Stainless steel cavity

DIMENSIONS

Product height (mm): 390
Product width (mm): 595
Product depth (mm): 325
Product length (mm):
Net weight (Kg): 16,5

TECHNICAL DETAILS

MWO Power (W): 750
Frequency (Hz): 50
Maximum Nominal Power (W): 1200
Grill (W): -

COLOURS

	40584001	White
	40584000	Stainless steel