MAESTRO **Stone 45 S-TG 1B 1D**

Inset Tegranite sink with one bowl and one drainer

200mm depth | Colour Intensity | Easy Clean | Food safe | High resistance

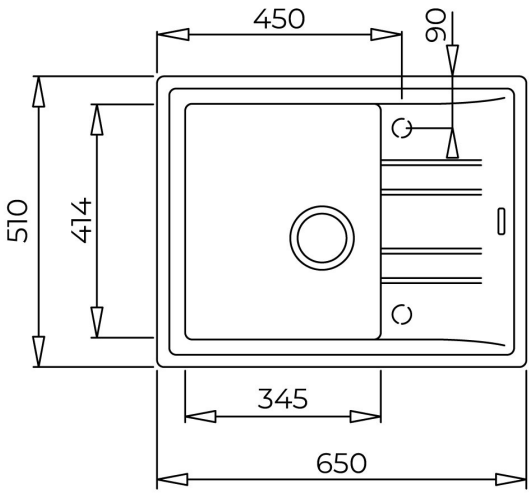


## REFERENCE

REF: 115330050 EAN: 8434778006582

## FEATURES

Tegranite+ sink
One bowl and one drainer
Inset installation
3½" automatic basket waste with siphon
200 mm deep bowl
45 cm base unit

## DIMENSIONS

**Product height (mm):**
**Product width (mm):** 510
**Product depth (mm):** 200
**Product length (mm):** 650
**Net weight (Kg):** 10,5

## COLOURS

| | |
|---|---|
| 115330050 | Carbon |
| 115330049 | White |
| 115330049 | Topasbeige |
| 115330049 | Metallic Black |
| 115330049 | Sandbeige |
| 115330049 | Dark Grey |
| 115330049 | Metallic Grey |