DBP 60 PRO EEC/EU 60cm Pyramidal Decorative Hood with 4 speeds

LED

DESCRIPTION	60cm Pyramidal Decorative Hood with 4 speeds
LIFE STYLE	Easy
COLOURS	
REFERENCE	REF. 40460509 EAN. 8421152133705

DBP 60 PRO EEC/EU

FEATURES

Decorative pyramidal hood
Push buttons control
4 speeds
Free Outlet exhaust capacity (m3/h): 650
Max speed exhaust capacity (m3/h): 614
Min speed exhaust capacity (m3/h): 268
Max speed sound level (dBA): 68
Min speed sound level (dBA): 55
2 LED lamps
2 Stainless Steel filters
Operating pilot light
Anti-return valve included
Outlet reduction included
Optional recirculation kit with tube cover installation: SET 1/M1
Optional Charcoal Filter: D4C

DBP 60 PRO EEC/EU

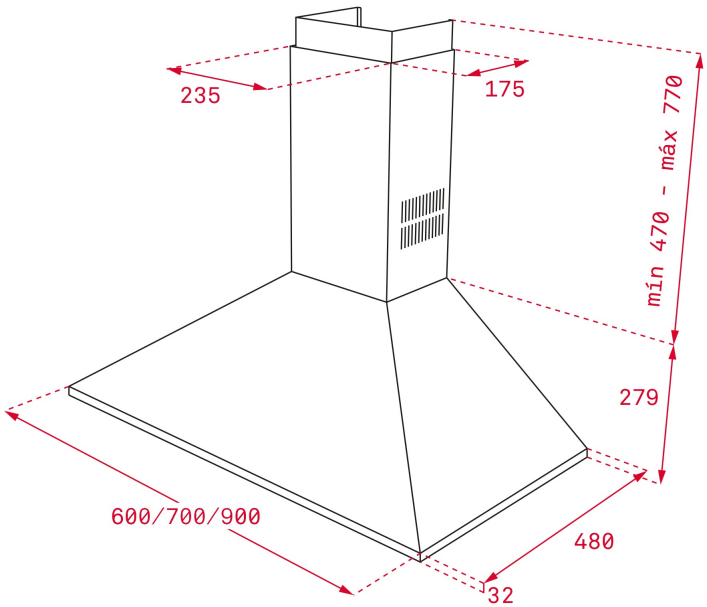

DIMENSIONS

Product height (mm): 749-1049
Product width (mm): 600
Product depth (mm): 480
Product length (mm):
Net weight (Kg): 7,4

TECHNICAL DETAILS

FEATURES

Certificates: CE; CB; Rohs
Ø Outlet (mm): 150
Type of inner light: LED
Inside light Consumption (W): 5
Plug type: European plug
Cable Connection Length (cm): 100
Power rate (V): 220-240
Frequency (Hz): 50/60
Total hood power (W): 190
Number of motors: 1
Motor power (W): 180
Air flow (Qmin) m3/h: 268
Air flow (Qmax): 614
Air flow (Qboost): 0

ACCESSORIES

Anti Return valve: Yes
Outlet reduction: Yes
Outlet extension: No
Optional Charcoal Filter: C1RTK
Regenerative charcoal filter: R1RTK

Integration Frontal panel Code: No
Conventional recirculation kit (opt) - w/tube cover: CFH 15200 L2C
Regenerative recirculation kit (opt) - w/tube cover: RFH 15200 L2C
Conventional recirculation kit (opt) - w/o tube cover: No
Regenerative recirculation kit (opt) - w/o tube cover: No

MODELS

Number of filters: 2
Filter description: Stainless Steel filters
Opening system: No
Control panel: Rectangular Push Buttons
Number of speeds: 3 + 1

DBP 60 PRO EEC/EU
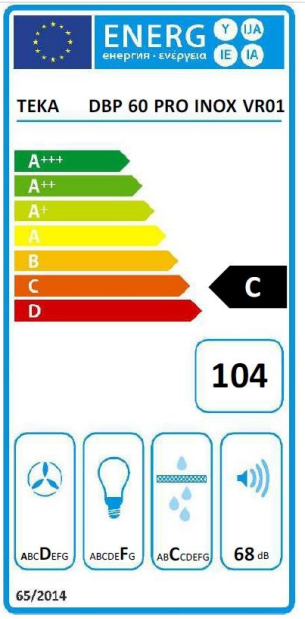
ENERGY LABEL