HLC 844 C SurroundTemp Compact Multifunction Oven in 45cm with microwave function

Defrost By Time | Defrost By Weight | 40L | HydroClean | SurroundTemp

DESCRIPTION	SurroundTemp Compact Multifunction Oven in 45cm with microwave function
LIFE STYLE	Maestro
COLOURS	
REFERENCE	REF. 40587612 EAN. 8421152154373

HLC 844 C

FEATURES

Multifunction SurroundTemp oven + Microwave
11 cooking functions
5 power levels + 1000 W microwave power
2500 W Grill
Defrost by time and weigh
HydroClean system
Touch control display with knobs
Electronic timer (Delay/Start function)
Chrome supports with 5 cooking levels
Removable triple glazed door
Automatic disconnection security system
Children safety lock
Anti-tip glass tray and reinforced grid
Capacity (gross/net): 41 / 40 litres

HLC 844 C

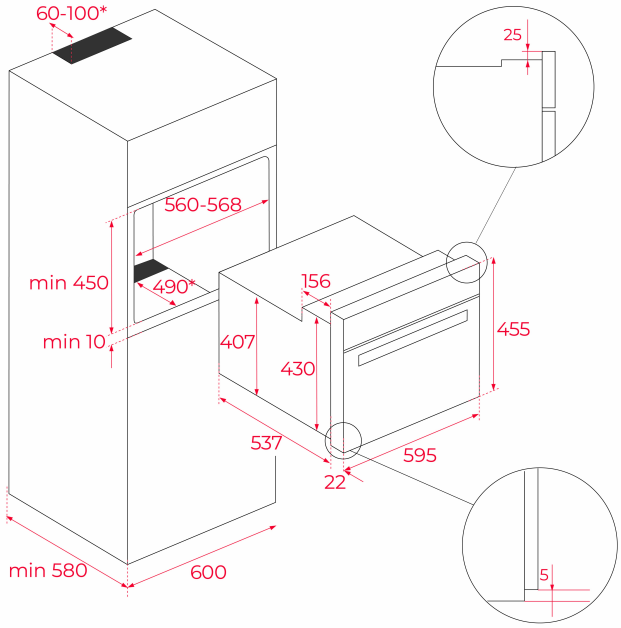

DIMENSIONS

Product height (mm): 455
Product width (mm): 595
Product depth (mm): 559
Product length (mm):
Net weight (Kg): 30

TECHNICAL DETAILS

FEATURES

Certificates: CE/CB
Number of cavities: 1
Type of inner light: Halogen
Inside light position: Top rear right
Enamelled cavity: Yes
Min. Temperature Regulator (ºC): 50
Max. Temperature Regulator (ºC): 250
Function selector: Mechanical
Number of cooking functions: 11
Top + Bottom function: Yes
MaxiGrill function: Yes
Top + Bottom + Fan function: Yes
MaxiGrill + Fan function: Yes
Bottom function: Yes
Bottom + TURBO (Pizza) function: Yes
Turbo function: Yes
ECO function: Yes
Touch Control Programmer: Yes
Knobs type: MMX FIX KNOB
Removable chromed tray guides: Yes
Number of guide levels: 5
Number of guide levels (lower cavity): 0

Forced refrigeration tangential 1 speed: Yes
Microwave function: Yes
Microwave + Grill function: Yes
Microwave + Turbo function: Yes
Microwave defrosting: Yes
Number of power levels: 5
Seconds Quick Start: Yes
Tangential ventilation: Yes

ELECTRIC CONNECTION

Maximum Nominal Power (W): 3400
Frequency (Hz): 50
Power rate (V): 220-240
Cable Connection Length (cm): 110
Inside light Consumption (W): 25

ENERGY CONSUMPTION

Bottom Heating Element (W): 1000
Maxi Grill (W): 2500
Traditional (W): 2100
Turbo (W): 1600
Multifunction Turbo (W): 30
Cooling Fan Motor (W): 18

SAFETY SYSTEMS

Automatic disconnection when opening the door: Yes
Panel blocking system: Yes
Children safety block option: Yes
Grill protection: Yes
Anti-tip tray system: Yes
Safety Thermostat: Yes

CLEANING SYSTEM

Fingerprint proof stainless steel: Yes
Crystal Clean Enamel (Slippery): Yes
Hydroclean ECO: Yes

ACCESSORIES

Glass Tray: 1
Reinforced grid: 1