LP2 140 Free Standing Compact Dishwasher for 6 place settings in 55cm

Eco Function

DESCRIPTION	Free Standing Compact Dishwasher for 6 place settings in 55cm
LIFE STYLE	Total
COLOURS	
REFERENCE	REF. 40782910 EAN. 8421152144596

LP2 140

FEATURES

Free standing table top Dishwasher
Electronic control panel with display
Capacity: 6 plate settings
Washing programs: 6
Washing temperatures: 40°, 45°, 50°, 60°, 65°, 70°C
Fast programs: 30 minutes
ECO program
AquaSafe safety system
Low salt and rinse indicator
Delay timer: 1-24 hours
Noise level: 49 dBA
Adjustable back feet from front

LP2 140

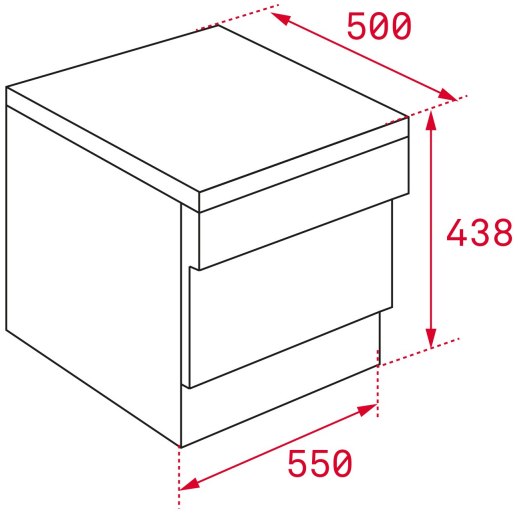

DIMENSIONS

Product height (mm): 438
Product width (mm): 550
Product depth (mm): 500
Product length (mm):
Net weight (Kg): 21

TECHNICAL DETAILS

PRODUCT SHEET

Capacity (Place Settings): 6
Energy consumption (kWh/year): 174
Power consumption (Kwh): 0,609
Water consumption (litres/year): 1820
Water consumption (litres): 6.5
Standard program: ECO
Standard cycle duration (minutes): 180
Noise level (dB): 49
Certificates: GS;CE;EMC;Rohs;SAA

POWER SUPPLY

Frequency (Hz): 50
Power rate (V): 220-240
Power rate (W): 1280
Plug type: EU
Maximum Nominal Power (W): 1280

FEATURES

Type of installation: Table top
Control panel: Electronic buttons
Control panel display: Yes

Number of programs: 6
Number Of Washing Temperatures: 6
Water softener: Yes
Microfilter: Yes

SAFETY SYSTEMS

Internal Leakage Control: Yes

CONTROL INDICATOR LIGHTS

Low Salt Aid indicator: Yes
Low Rinse Aid indicator: Yes
Selected program indicator: Yes
Remaining time: Yes

SPECIAL FUNCTIONS

Fast program: Yes
Fast program (minutes): 30
Economic program: Yes
Delayed Timer (h): 1-24 HOURS

LP2 140
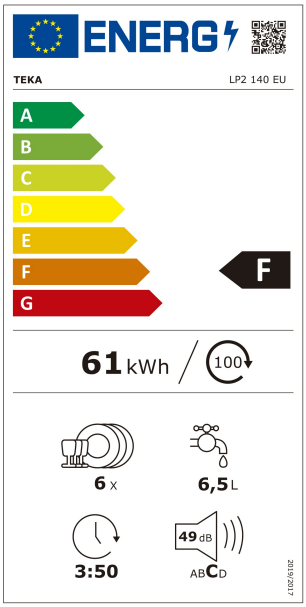
ENERGY LABEL