MWR 32 BI Country Style Edition Built-in Microwave + grill in 45cm with ceramic base

Defrost By Time

32L

DESCRIPTION	Country Style Edition Built-in Microwave + grill in 45cm with ceramic base
LIFE STYLE	Total
COLOURS	
REFERENCE	REF. 40586036 EAN. 8421152140987

MWR 32 BI

FEATURES

Country Style Edition
Microwave + Grill
3 cooking functions
5 power levels + 1000 W microwave power
1500 W grill
Defrost by time
Mechanical control knobs
Mechanical timer (Stop function)
Removable triple glazed door
Automatic disconnection security system
Capacity (gross/net): 38 / 32 litres

MWR 32 BI

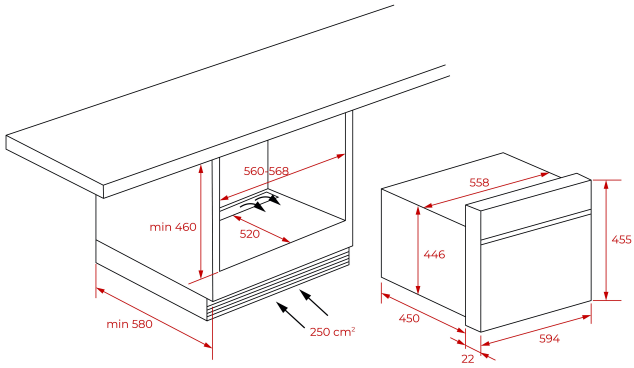

DIMENSIONS

Product height (mm): 455
Product width (mm): 595
Product depth (mm): 472
Product length (mm):
Net weight (Kg): 32

TECHNICAL DETAILS

FEATURES

Certificates: CE; CB; EAC
Type of inner light: 20 W HALOGEN
Inside light position: TOP
Function selector: MECHANICAL
Number of cooking functions: 3 (MWO, GRILL, MWO+GRILL)
Grill function: Yes
Keeping warm: Yes
Minute Minder: Yes
Knobs type: 2 ROTATING MECHANICAL
Number of guide levels: 0
Drop-down grill: Yes
Number of guide levels (lower cavity): 0
Forced refrigeration tangential 1 speed: Yes
Microwave function: Yes
Microwave + Grill function: Yes
Microwave defrosting: Yes
Number of power levels: 5
Tangential ventilation: Yes

ELECTRIC CONNECTION

Maximum Nominal Power (W): 3300

Frequency (Hz): 50
Power rate (V): 220-240
Cable Connection Length (cm): 150
Plug: Yes
Inside light Consumption (W): 20

ENERGY CONSUMPTION

Bottom Heating Element (W): No
Grill (W): 1500
Maxi Grill (W): 1500
Traditional (W): No
Turbo (W): No
Multifunction Turbo (W): No
Cooling Fan Motor (W): 35

SAFETY SYSTEMS

Automatic disconnection when opening the door: Yes
Safety Thermostat: Yes

ACCESSORIES

Baking Tray: No
Deep Tray (50 mm): No
Glass Tray: No
Reinforced grid: No
Meat Probe: No
Crunch plate: 1

ENERGY EFFICIENCY

Energy Efficiency Class: No