HLC 8400 Urban Colors Edition SurroundTemp Compact Multifunction Oven in 45cm with HydroClean® PRO

44L | Plus Extension Telescopic Guide | HydroClean | SurroundTemp

DESCRIPTION	Urban Colors Edition SurroundTemp Compact Multifunction Oven in 45cm with HydroClean® PRO
LIFE STYLE	Maestro
COLOURS	
REFERENCE	REF. 111130002 EAN. 8434778007626

HLC 8400

FEATURES

Urban Colors Edition
Multifunction SurroundTemp oven
9 cooking functions
Automatic HydroClean system
Touch control display with knobs
Electronic timer (Delay/Start function)
Chrome supports with 3 cooking levels
Plus Extension Telescopic guides
Removable triple glazed door
Manual quick preheating
Anti-tip deep tray and reinforced grid
Capacity (gross/net): 45 / 44 litres

HLC 8400

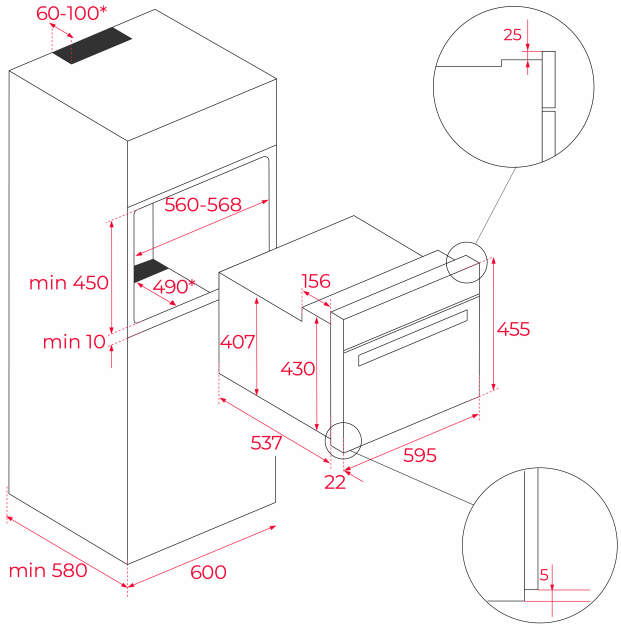

DIMENSIONS

Product height (mm): 455
Product width (mm): 595
Product depth (mm): 537+22
Product length (mm):
Net weight (Kg): 25

TECHNICAL DETAILS

FEATURES

Certificates: N / CE / CCA / CB / JAS-ANZ/GMARK/SASO
Number of cavities: 1
Type of inner light: Halogen
Inside light position: RIGHT TOP CORNER
Enamelled cavity: Yes
Min. Temperature Regulator (ºC): 50
Max. Temperature Regulator (ºC): 250
Function selector: 11+0
Number of cooking functions: 9
Top + Bottom function: Yes
Top function: Yes
Grill function: Yes
MaxiGrill function: Yes
MaxiGrill + Fan function: Yes
Bottom function: Yes
Bottom + TURBO (Pizza) function: Yes
Turbo function: Yes
ECO function: Yes
Mechanical quick heating: Yes
Touch Control Programmer: Yes
Knobs type: MMX FIX KNOB knurling
Removable chromed tray guides: Yes

Number of guide levels: 3
Easy slide telescopic guides: Yes
Drop-down grill: Yes
Number of guide levels (lower cavity): 0

ELECTRIC CONNECTION

Maximum Nominal Power (W): 3015
Frequency (Hz): 50/60
Power rate (V): 220-240
Cable Connection Length (cm): 110
Inside light Consumption (W): 25

ENERGY CONSUMPTION

Energy consumption per cycle in conventional mode (kWh): 0.72
Energy consumption per cycle in fan-forced convection mode (kWh): 0,59
Bottom Heating Element (W): 1150
Grill (W): 1400
Maxi Grill (W): 2500
Traditional (W): 2550
Turbo (W): 1800
Multifunction Turbo (W): 22
Cooling Fan Motor (W): 18

SAFETY SYSTEMS

Panel blocking system: Yes
Grill protection: Yes
Anti-tip tray system: Yes
Safety Thermostat: Yes

CLEANING SYSTEM

Crystal Clean Enamel (Slippery): Yes
Hydroclean PRO: Yes

ACCESSORIES

Deep Tray (50 mm): 1
Reinforced grid: 1

ENERGY EFFICIENCY

Energy Efficiency Class: A+
Energy Efficiency Index (EEI): 80,8

HLC 8400
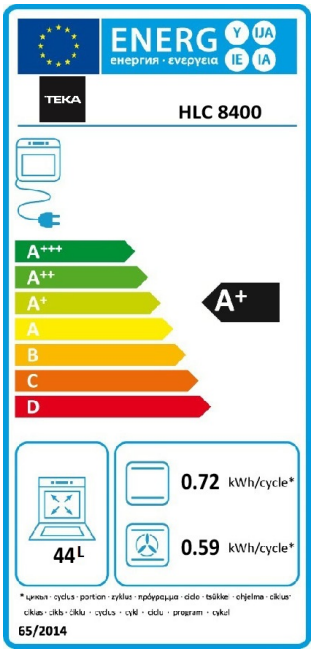
ENERGY LABEL