GZC 96310 Gas on Glass Hob with 6 cooking zones in 90cm of butane gas

Auto ignition | Autolock | ExactFlame | Easy installation

DESCRIPTION	Gas on Glass Hob with 6 cooking zones in 90cm of butane gas
LIFE STYLE	Total
COLOURS	
REFERENCE	REF. 112570073 EAN. 8434778006971

GZC 96310

FEATURES

Urban Colors Edition
Gas on glass hob
ExactFlame
Frontal control knobs with ergonomic design
6 cooking zones
1 double ring burner, 4.00 kW
1 fast burner, 2.8 kW
3 semi fast burners, 1.7 kW
1 auxiliary burner, 1 kW
Ceramic glass surface
Auto ignition
Auto-lock safety system
Cast iron grids
Easy installation kit
Maximum nominal power 12.700 W
Optional: Wok support
Silver knobs accessory available

GZC 96310

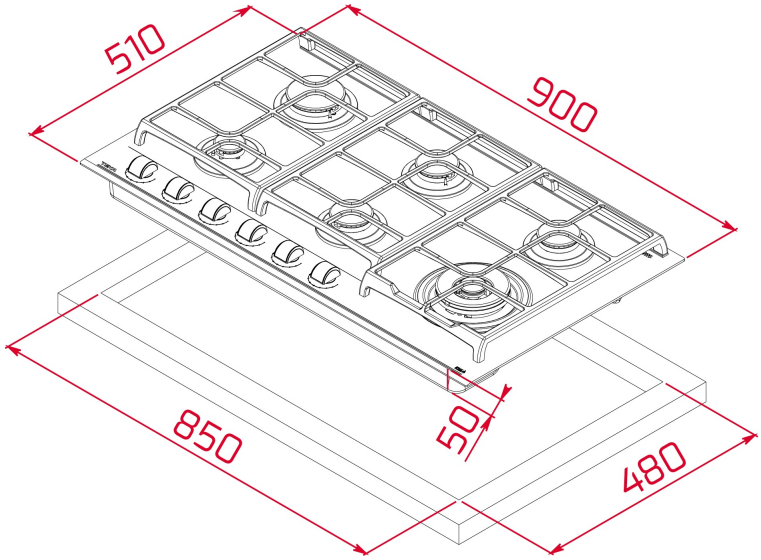

DIMENSIONS

Product height (mm): 98
Product width (mm): 900
Product depth (mm): 510
Product length (mm):
Net weight (Kg): 17,2

TECHNICAL DETAILS

FITTING MEASURES	**Built-in Width (mm):** 850 **Built-in Depth (mm):** 480 **Built-in height (mm):** 49
FEATURES	**Gas type:** Butane **Maximum nominal power (W) (Gas):** 12700 **Autoignition:** Yes **Number of electric power levels:** 9
ELECTRIC CONNECTION	**Frequency (Hz):** 60 **Power rate (V):** 110 **Cable Connection Length (cm):** 110 **Maximum Nominal Power (W) (Electric hob):** 1100
COOKING ZONES	**Cooking Zones:** 6

SAFETY SYSTEMS	**Automatic safety disconnection (Auto Lock) (Gas):** Yes **Automatic safety disconnection (Auto Lock) (Electric hob):** Yes
FINISH	**Surface finishing:** Front bevelled glass **Surface type:** Ceramic Glass (4mm) **Easy installation system:** Yes
ACCESSORIES	**Grid type:** Full Grid **Wok support:** Optional **Junction Kit:** Optional **Cast Iron Grids:** Yes **Teppan Yaki:** NO