IZC 63630 MST Induction hob with Direct Functions MultiSlider and 3 cooking zones in 60 cm

MultiSlider | Autolock | Power | Power Plus | Easy installation | Super Zone

DESCRIPTION	Induction hob with Direct Functions MultiSlider and 3 cooking zones in 60 cm
LIFE STYLE	Maestro
COLOURS	
REFERENCE	REF. 112500018 EAN. 8434778011609

IZC 63630 MST

FEATURES

Urban Colors Edition
MasterSense Series
Induction hob
Direct functions with temperature sensors: Quick boiling, grilling, pan frying, deep frying, simmering, melting, confit and keep warm
Touch Control MultiSlider
3 cooking zones
1 zone Ø 320/180 mm
1 zone Ø 215 mm
1 zone Ø 150 mm
Ceramic glass surface
Auto-lock safety system
Cooking timer
Power plus
Child lock
Residual heat indicator
Power management
Easy installation kit
Maximum nominal power 7200 W
Optional: Grilling plate
Optional: Teppanyaki

IZC 63630 MST

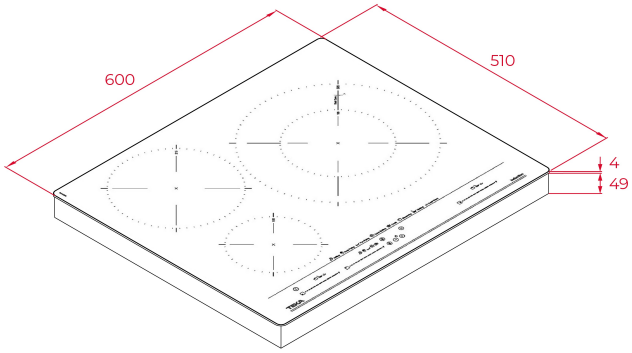

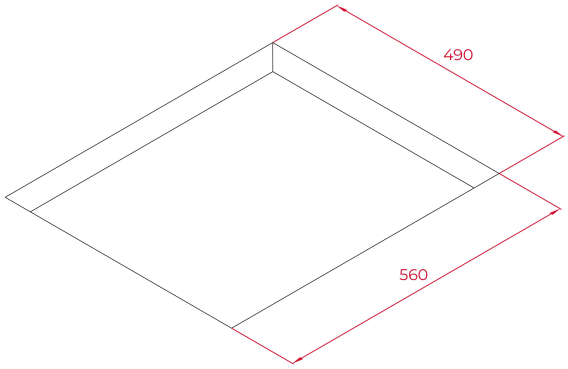

DIMENSIONS

Product height (mm): 53
Product width (mm): 600
Product depth (mm): 510
Product length (mm):
Net weight (Kg): 10,7

TECHNICAL DETAILS

FITTING MEASURES

Built-in Width (mm): 560
Built-in Depth (mm): 490
Built-in height (mm): 49

FEATURES

Number of electric power levels: 9
Grilling: Yes
Pan frying: Yes
Deep frying: Yes
Simmering: Yes
Melting: Yes
Keeping warm: Yes
Confit: Yes
Power management function: Yes

ELECTRIC CONNECTION

Frequency (Hz): 50/60
Power rate (V): 220-240
Cable Connection Length (cm): 110
Maximum Nominal Power (W) (Electric hob): 7200

COOKING ZONES	**Cooking Zones:** 3
SAFETY SYSTEMS	**Residual heat indicator (Gas):** Yes **Residual heat indicator (Electric hob):** Yes **Automatic safety disconnection (Auto Lock) (Electric hob):** Yes **Child lock:** Yes
FINISH	**Surface finishing:** Front bevelled glass **Surface type:** Ceramic Glass (4mm) **Easy installation system:** Yes
ACCESSORIES	**Junction Kit:** Optional **Teppan Yaki:** Optional