DFI 74910 Fully integrated dishwasher with Third cutlery tray and Automatic Opening system

Eco Function | Third Cutlery Tray | Detergent detector system | AutoDoor opening system | Water dirtiness sensor Aqualogic

DESCRIPTION	Fully integrated dishwasher with Third cutlery tray and Automatic Opening system
LIFE STYLE	Maestro
COLOURS	
REFERENCE	REF. 114300001 EAN. 8434778013641

DFI 74910

FEATURES

Built-in Dishwasher
Electronic control panel with display
Capacity: 11 plate settings
Washing programs: 9
Washing temperatures: 35°, 40°, 45°, 50°, 65°, 70°C
Motor Inverter
PremiumDry automatic opening system
SmartSensor measure the level of dirtiness
MultiCleaner Sensor
FlexiSet 1 lower basket
Fast programs: 30 minutes
Special programs: GlassCare, DualCare, AutoClean, AutoProgram, Intensive program, ECO program, 1-Hour, PreWash
Special functions: Half load, Express, PowerWash
AquaStop and AquaSafe safety systems
Low salt and rinse indicator
Third sprayer
Push-up adjustable upper basket
Delay timer: 1-24 hours
Noise level: 45 dBA
Adjustable back feet from front
Sliding Detergent drawer
Column installation

DFI 74910

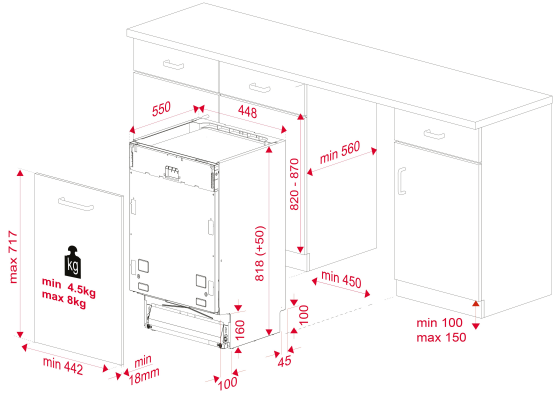

DIMENSIONS

Product height (mm): 818
Product width (mm): 448
Product depth (mm): 550
Product length (mm):
Net weight (Kg): 28,5

TECHNICAL DETAILS

FITTING MEASURES

Built-in niche height (cm): 82-87 cm

PRODUCT SHEET

Capacity (Place Settings): 11
Energy consumption (kWh/year): 225
Power consumption (Kwh): 0.78
Water consumption (litres/year): 2436
Water consumption (litres): 8.7
Standard program: Eco 50
Standard cycle duration (minutes): 184
Noise level (dB): 45
Certificates: CB; CE

POWER SUPPLY

Frequency (Hz): 50
Power rate (V): 220-240
Plug type: EU
Cable Connection Length (cm): 170
Maximum Nominal Power (W): 2100
Power of heating element (W): 1800

FEATURES	**Type of installation:** Built-in **Control panel:** Electronic buttons **Control panel display:** Yes **Number of programs:** 9 **Number Of Washing Temperatures:** 6 **Aqua-Logic:** Yes **3 in 1 selector:** Yes **Water softener:** Yes **Microfilter:** Yes **Installation in column:** Yes
SAFETY SYSTEMS	**Internal Leakage Control:** Yes **Aquastop:** Yes
CONTROL INDICATOR LIGHTS	**Low Salt Aid indicator:** Yes **Low Rinse Aid indicator:** Yes **Selected program indicator:** Yes **Remaining time:** Yes **Extra rinse indicator:** Yes **Auto door opening indicator:** Yes
SPECIAL FUNCTIONS	**Soak/Prewash program:** Yes **Fast program:** Yes **Fast program (minutes):** 30 **1 Hour program:** Yes **Economic program:** Yes **Intense program:** Yes **Half load:** Yes **Delayed Timer (h):** 1-24 HOURS **Extra rinse:** Yes
EQUIPMENT	**3rd Basket:** Yes **3rd sprayer:** Yes **Adjustable back feet from front:** Yes

DFI 74910
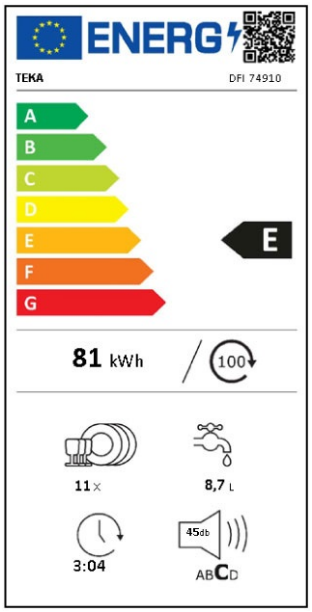
ENERGY LABEL