EX 90.1 5G AI AL DR CI Gas Stainless Steel Hob with frontal control knobs of butane and natural gas in 86 cm

Auto ignition

DESCRIPTION	Gas Stainless Steel Hob with frontal control knobs of butane and natural gas in 86 cm
LIFE STYLE	Total
COLOURS	
REFERENCE	REF. 112610044 EAN. 8434778019544

EX 90.1 5G AI AL DR CI

FEATURES

Gas hob
Frontal control knobs
5 cooking zones
1 double ring burner, 4.00 kW
1 fast burner, 2.8 kW
3 semi fast burners, 1.7 kW
Stainless steel surface
Auto ignition
Cast iron grids
Maximum nominal power 12.050 W
Optional: Wok support

EX 90.1 5G AI AL DR CI

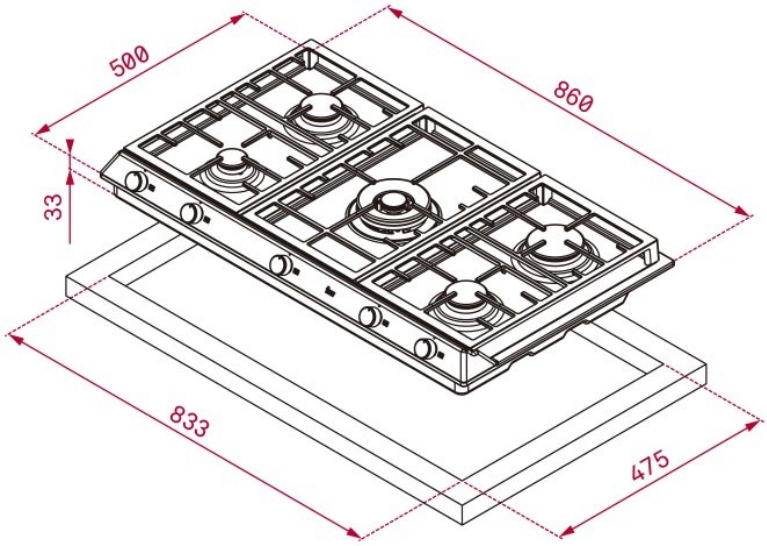

DIMENSIONS

Product height (mm): 84
Product width (mm): 860
Product depth (mm): 500
Product length (mm):
Net weight (Kg): 13,5

TECHNICAL DETAILS

FITTING MEASURES	**Built-in Width (mm):** 833 **Built-in Depth (mm):** 475 **Built-in height (mm):** 32
FEATURES	**Gas type:** Natural&Butane **Maximum nominal power (W) (Gas):** 12050 **Autoignition:** Yes
ELECTRIC CONNECTION	**Frequency (Hz):** 50/60 **Power rate (V):** 220-240 **Cable Connection Length (cm):** 100
COOKING ZONES	**Cooking Zones:** 5
FINISH	**Surface finishing:** Brushed stainless steel **Surface type:** Stainless Steel
ACCESSORIES	**Grid type:** Full Grid **Wok support:** Optional **Junction Kit:** NO **Cast Iron Grids:** Yes

Teppan Yaki: NO