EH 60 4G AI AL TR CI NTB OB Gas Stainless Steel Hob with frontal control knobs of butane and natural gas in 58 cm

Auto ignition

Autolock

DESCRIPTION	Gas Stainless Steel Hob with frontal control knobs of butane and natural gas in 58 cm
LIFE STYLE	Total
COLOURS	
REFERENCE	REF. 112620004 EAN. 8434778018981

EH 60 4G AI AL TR CI NTB OB

FEATURES

Country Style Edition
Gas hob
Frontal control knobs
4 cooking zones
1 triple ring burner, 3.5 kW
1 fast burner, 3.00 kW
1 semi fast burner, 1.7 kW
1 Auxiliary burner, 1 kW
Enamelled surface
Auto ignition
Automatic safety disconnection
Cast iron grids
Maximum nominal power 9250 W

EH 60 4G AI AL TR CI NTB OB

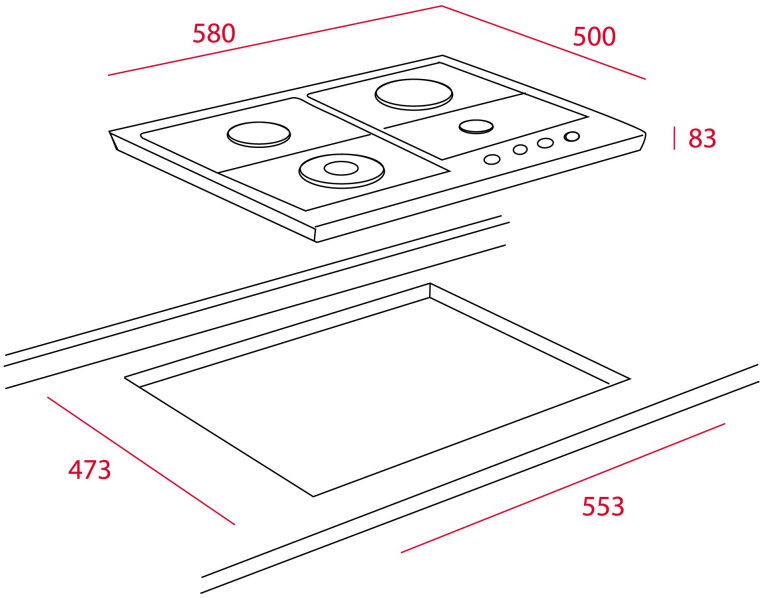

DIMENSIONS

Product height (mm): 84
Product width (mm): 580
Product depth (mm): 500
Product length (mm):
Net weight (Kg): 8,95

TECHNICAL DETAILS

FITTING MEASURES	**Built-in Width (mm):** 553 **Built-in Depth (mm):** 473 **Built-in height (mm):** 32
FEATURES	**Gas type:** Natural&Butane **Maximum nominal power (W) (Gas):** 9250 **Autoignition:** Yes
ELECTRIC CONNECTION	**Frequency (Hz):** 50/60 **Power rate (V):** 220-240 **Cable Connection Length (cm):** 100
COOKING ZONES	**Cooking Zones:** 4
SAFETY SYSTEMS	**Automatic safety disconnection (Auto Lock) (Gas):** Yes
FINISH	**Surface finishing:** Anthracite

Surface type: Enamelled surface

ACCESSORIES

Grid type: Conected Grid
Wok support: NO
Junction Kit: NO
Cast Iron Grids: Yes
Teppan Yaki: NO