ML 822 BIS R Built-in Microwave with ceramic base + Grill

Ceramic base

Defrost By Time

Defrost By Weight

Direct Access Menu

Electronic Door Opening

22L

DESCRIPTION	Built-in Microwave with ceramic base + Grill
LIFE STYLE	Maestro
COLOURS	
REFERENCE	REF. 40584301 EAN. 8421152145500

ML 822 BIS R

FEATURES

Built-in Microwave + Grill
Ceramic base with uniform heating
3 cooking functions
9 direct access menus
5 power levels, 2500 W
Grill power: 1200 W
Defrost by time and weight
Touch control display with knobs
Double glazed door with right opening
Electronic door opening
Children safety lock
Automatic disconnection when open door
Incandescent inner light
Dropdown grill
Quick start
Capacity (gross/net): 22 / 21.56 litres
Stainless steel cavity
Tangential ventilation

ML 822 BIS R

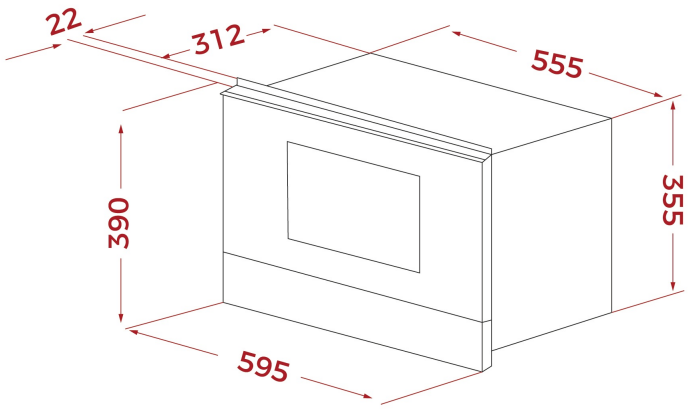

DIMENSIONS

Product height (mm): 390
Product width (mm): 595
Product depth (mm): 334
Product length (mm):
Net weight (Kg): 23,2

TECHNICAL DETAILS

FEATURES

Certificates: CE/CB/Gmark
Type of inner light: INCANDESCENT
Inside light position: RIGHT
Number of cooking functions: 3
Grill function: Yes
Drop-down grill: Yes
Number of guide levels (lower cavity): 0
Forced refrigeration tangential 1 speed: Yes
Microwave function: Yes
Microwave + Grill function: Yes
Number of power levels: 5
Minute Quick Start: Yes
Seconds Quick Start: Yes
Tangential ventilation: Yes

ELECTRIC CONNECTION

Maximum Nominal Power (W): 2700
Frequency (Hz): 50
Power rate (V): 220-240
Cable Connection Length (cm): 110
Plug: Yes

	Inside light Consumption (W): 20
ENERGY CONSUMPTION	**Grill (W):** 1200 **Maxi Grill (W):** 1200 **Cooling Fan Motor (W):** 18
SAFETY SYSTEMS	**Automatic disconnection when opening the door:** Yes **Panel blocking system:** Yes **Children safety block option:** Yes **Grill protection:** Yes **Safety Thermostat:** Yes
ACCESSORIES	**Glass Tray:** 0 **Crunch plate:** YES