IBR 64040 TTC 60 cm induction hob with touch control, cooking timer and child lock

DESCRIPTION	60 cm induction hob with touch control, cooking timer and child lock
LIFE STYLE	Total
COLOURS	
REFERENCE	REF. 112520013 EAN. 8434778011838

IBR 64040 TTC

FEATURES

Induction hob
Touch control
4 cooking zones
1 zone Ø 210 mm
1 zone Ø 185 mm
2 zones Ø 145 mm
Ceramic glass surface
Auto-lock safety system
Indution:
Cooking timer
Power plus
Child lock
Residual heat indicator
Power management
Easy installation kit
Maximum nominal power 7200 W

IBR 64040 TTC

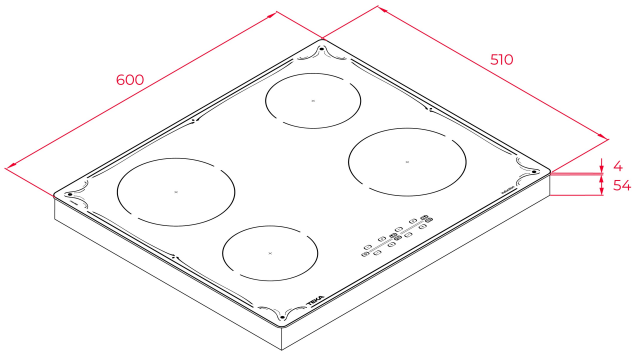

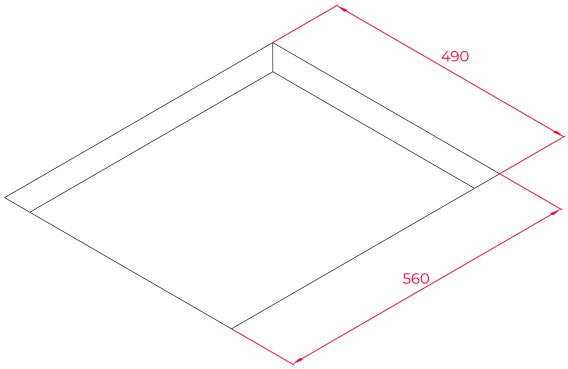

DIMENSIONS

Product height (mm): 50
Product width (mm): 600
Product depth (mm): 510
Product length (mm):
Net weight (Kg): 9,59