MY Compact Professional Kitchen Tap Mixer and extractable handle

DESCRIPTION	Professional Kitchen Tap Mixer and extractable handle
LIFE STYLE	Maestro
COLOURS	
REFERENCE	REF. 3893702 EAN. 8421152052303

MY Compact

FEATURES

Professional kitchen tap
Swivel and flexible spout 360°
Anti-scale aerator
Pull-down shower 2 functions: normal & shower spray
High resistant flexible spring
Flexible stainless steel pipe with plastic coating (protection and easy cleaning)
Cartridge with ceramic discs and adjustable flow and temperature
3/8" flexible inlet pipes

MY Compact

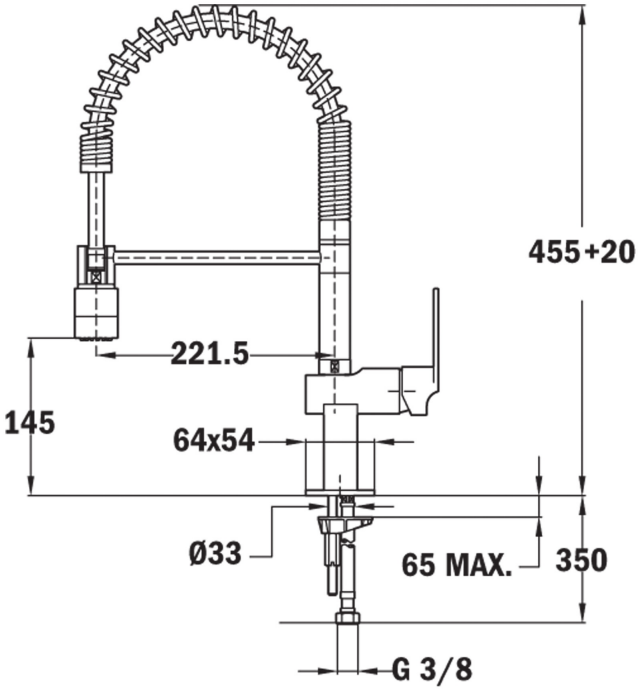

DIMENSIONS

Product height (mm):
Product width (mm):
Product depth (mm):
Product length (mm):
Net weight (Kg): 3,22

TECHNICAL DETAILS

MODELS	**Type of installation:** Free standing