Stylo 1B Inset stainless steel sink One bowl

Antibacterial

Lifetime warranty

DESCRIPTION	Inset stainless steel sink One bowl
LIFE STYLE	Total
COLOURS	
REFERENCE	REF. 10107074 EAN. 8421152130933

Stylo 1B

FEATURES

Stylo Series
Stainless steel sink
One bowl
Inset installation
3½" manual basket waste with siphon
165 mm deep bowl
45 cm base unit

Stylo 1B

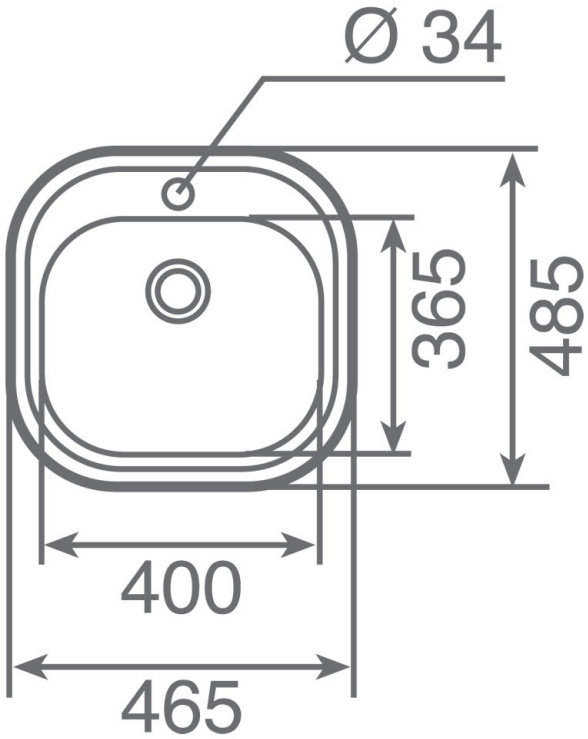

DIMENSIONS

Product height (mm):
Product width (mm): 485
Product depth (mm): 165
Product length (mm): 465
Net weight (Kg): 1,82

TECHNICAL DETAILS

MAIN BOWL	**Main Bowl Length (mm):** 400 **Main Bowl Width (mm):** 360 **Main Bowl Depth (mm):** 165
OTHER FEATURES	**Material:** Stainless Steel **Type of installation:** Inset **Number of tap holes:** 1 **Valve hole type:** 3½" **Overflow hole:** Round **Sink Bowl / Top thickness (mm):** 0,7
OTHERS	**Base unit (cm):** 45
SINK LAY OUT	**Number of bowls:** 1 **Number of drainers:** 0

ACCESSORIES	**Soundproof:** Yes **Installation clips:** Yes **Siphon:** Yes