Stone 60 B-TG 1½B 1D Inset Tegranite sink with two bowls, one auxiliary bowl and one drainer

200mm depth | Colour Intensity | Easy Clean | Food safe | High resistance

DESCRIPTION	Inset Tegranite sink with two bowls, one auxiliary bowl and one drainer
LIFE STYLE	Maestro
COLOURS	
REFERENCE	REF. 115360008 EAN. 8434778005059

Stone 60 B-TG 1½B 1D

FEATURES

Tegranite+ sink
One bowl, one auxiliary bowl and one drainer
Inset installation
3½" automatic basket waste with siphon
200 and 140 mm deep bowls
60 cm base unit

Stone 60 B-TG 1½B 1D

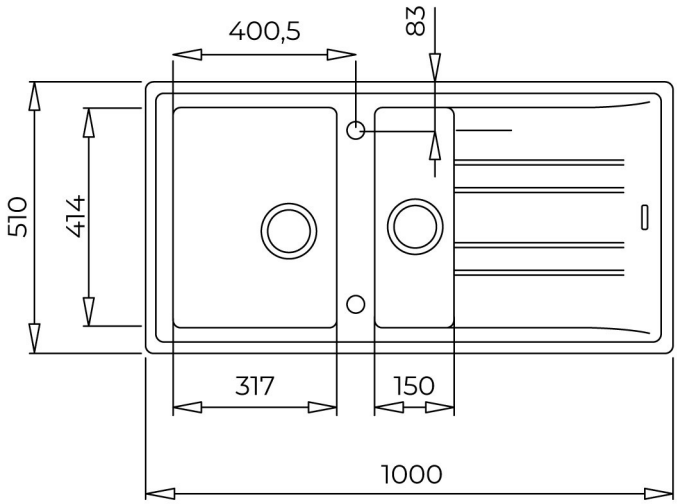

DIMENSIONS

Product height (mm):
Product width (mm): 510
Product depth (mm): 200
Product length (mm): 1000
Net weight (Kg): 15

TECHNICAL DETAILS

MAIN BOWL	**Main Bowl Length (mm):** 317 **Main Bowl Width (mm):** 414 **Main Bowl Depth (mm):** 200
OTHER FEATURES	**Material:** Tegranite+ **Type of installation:** Inset **Number of tap holes:** Pre-Drilled **Valve hole type:** 3½" **Overflow hole:** Round **Sink Bowl / Top thickness (mm):** 10/7
OTHERS	**Base unit (cm):** 60
SECONDARY BOWL	**Secondary Bowl Length (mm):** 150 **Secondary Bowl Width (mm):** 414 **Secondary Bowl Depth (mm):** 140

SINK LAY OUT	**Number of bowls:** 1 **Number of drainers:** 1 **Drainer position:** Reversible
ACCESSORIES	**Installation clips:** Yes **Siphon:** Yes