Be Linea RS15 50.40 PureClean Undermount installation stainless steel sink with polished finish

200mm depth | Antibacterial | R15, easy to clean

DESCRIPTION	Undermount installation stainless steel sink with polished finish
LIFE STYLE	Maestro
COLOURS	
REFERENCE	REF. 115000065 EAN. 8434778025293

Be Linea RS15 50.40 PureClean

FEATURES

Be Linea Series
Stainless steel sink, polished finish
One bowl
Undermount installation
PureClean waterproof effect
Easy clean radius R15 corners
3½” PerfectFlow manual waste basket with siphon
HelixPro waste basket
SilentSmart, 50% less noise
200 mm deep bowl
60 cm base unit

Be Linea RS15 50.40 PureClean

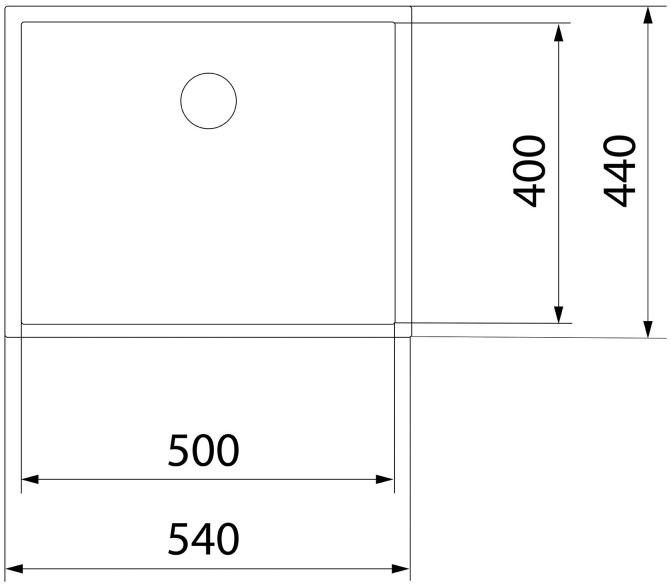

DIMENSIONS

Product height (mm):
Product width (mm): 440
Product depth (mm):
Product length (mm): 540
Net weight (Kg): 4,10

TECHNICAL DETAILS

MAIN BOWL	**Main Bowl Length (mm):** 500 **Main Bowl Width (mm):** 400 **Main Bowl Depth (mm):** 200
OTHER FEATURES	**Material:** Stainless Steel **Type of installation:** Undermount **Valve hole type:** 3½" rimless **Overflow hole:** Rectangular **Sink Bowl / Top thickness (mm):** 1
OTHERS	**Base unit (cm):** 60
SINK LAY OUT	**Number of bowls:** 1 **Number of drainers:** 0
ACCESSORIES	**Soundproof:** Yes

SilentSmart: Yes
Installation clips: Yes
Siphon: Yes