# DBP 60 PRO EEC/EU

Pyramidal decorative hood with 4 speeds

LED

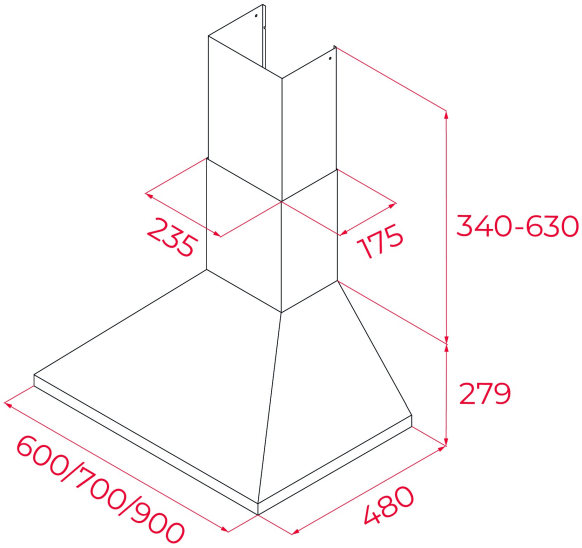


## REFERENCE

REF: 40460509 EAN: 8421152133705

## FEATURES

Decorative pyramidal hood
Push buttons control
4 speeds
Free Outlet exhaust capacity (m3/h): 650
Max speed exhaust capacity (m3/h): 614
Min speed exhaust capacity (m3/h): 268
Max speed sound level (dBA): 68
Min speed sound level (dBA): 55
2 LED lamps
2 Stainless Steel filters
Operating pilot light
Anti-return valve included
Outlet reduction included
Optional recirculation kit with tube cover installation: SET 1/M1
Optional Charcoal Filter: D4C

## DIMENSIONS

**Product height (mm):** 749-1049
**Product width (mm):** 600
**Product depth (mm):** 480
**Product length (mm):**
**Net weight (Kg):** 7,4

## TECHNICAL DETAILS

Energy Efficiency Class: C
Noise (LwA) Min Speed (dB): 55
Noise (LwA) Max Speed (dB): 68
Noise (LwA) Boost Speed (dB): 0
Ø Outlet (mm): 150

## COLOURS

40460509 Stainless steel