TOTAL **GZC 75330 XB**

Gas on Glass Hob with ExactFlame function in 70 cm of natural gas

Auto ignition | Autolock | ExactFlame | Easy installation

REFERENCE

REF: 112570173 EAN: 8434778019131

FEATURES

Urban Colors Edition
Gas on glass hob
ExactFlame
Frontal control knobs with ergonomic design
5 cooking zones
1 double ring burner, 4.00 kW
1 fast burner, 2.8 kW
2 semi fast burners, 1.7 kW
1 auxiliary burner, 1 kW
Ceramic glass surface
Auto ignition
Auto-lock safety system
Cast iron grids
Easy installation kit
Maximum nominal power 11.300 W
Optional: Wok support
Silver knobs accessory available

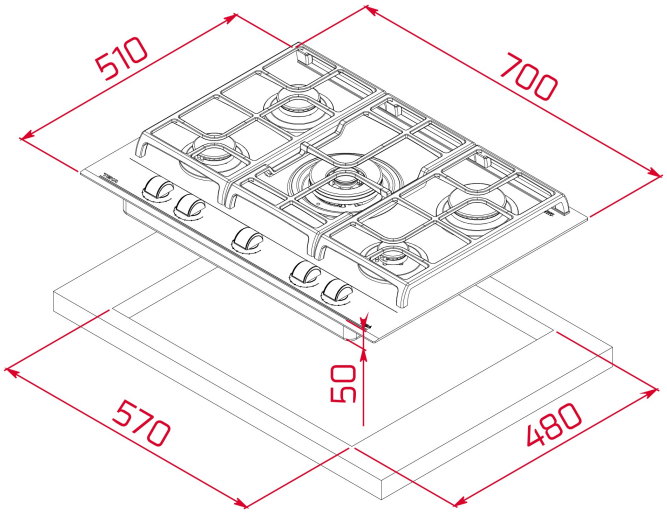

DIMENSIONS

Product height (mm): 98
Product width (mm): 700
Product depth (mm): 510
Product length (mm):
Net weight (Kg): 13,5

TECHNICAL DETAILS

Power rate (V): 220-240
Frequency (Hz): 50/60
Maximum Nominal Power (W): -

COLOURS

112570173	Black Glass
112570174	White Glass
112570174	Stone Grey Glass
112570174	London brick brown glass