TOTAL **MS 622 BIS R**

Built-in Microwave with ceramic base + Grill

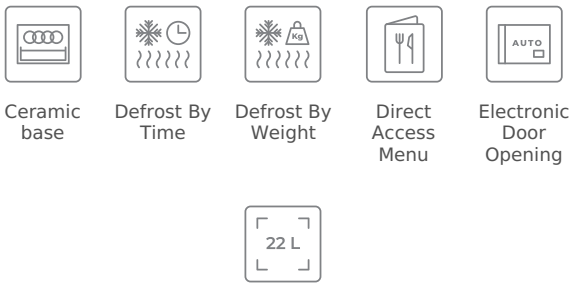

Ceramic base | Defrost By Time | Defrost By Weight | Direct Access Menu | Electronic Door Opening | 22L

REFERENCE

REF: 40584101 EAN: 8421152145531

FEATURES

Built-in Microwave + Grill
Ceramic base with uniform heating
3 cooking functions
2 direct access menus
5 power levels, 2500 W
Grill power: 1200 W
Defrost by time and weight
Touch control display with knobs and minute minder
Double glazed door with right opening
Electronic door opening
Children safety lock
Automatic disconnection when open door
Incandescent inner light
Dropdown grill
Quick start
Capacity (gross/net): 22 / 21.56 litres
Stainless steel cavity
Tangential ventilation

DIMENSIONS

Product height (mm): 390
Product width (mm): 595
Product depth (mm): 334
Product length (mm):
Net weight (Kg): 23,2

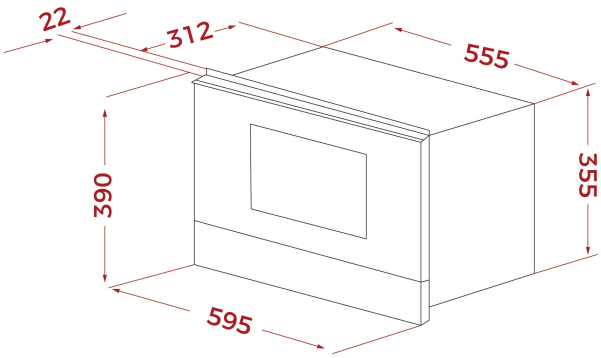

TECHNICAL DETAILS

MWO Power (W): 850
Frequency (Hz): 50
Maximum Nominal Power (W): 2700
Grill (W): 1200

COLOURS

40584101 Stainless Steel

40584100 Stainless Steel