MAESTRO **American Professional 60 M-XP 1B**

3-in-1 Installation stainless steel sink with one bowl and SilentSmart

REFERENCE

REF: 115000055 EAN: 8434778019223

FEATURES

American Professional Series
Stainless steel sink, Polished finish
Apron front sink
One bowl
3-in-1 installation possibilities: undermount, top or flush
3½” SQ manual basket waste with siphon
Decorative SQ cover
SilentSmart, 50% less noise
200 mm deep bowl
60 cm base unit

200mm depth

Antibacterial

DIMENSIONS

Product height (mm):
Product width (mm): 468
Product depth (mm):
Product length (mm): 595
Net weight (Kg): 8,62

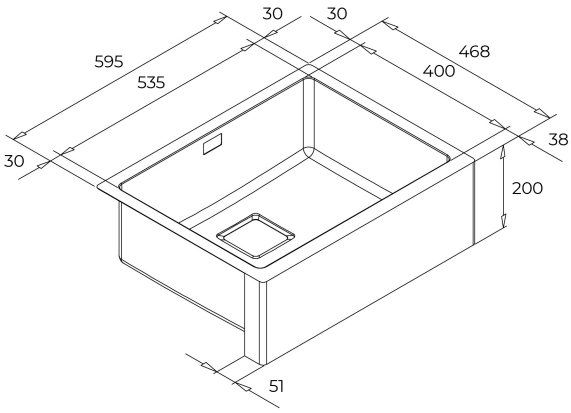

COLOURS