MAESTRO **MasterSense Air AFF 87601 MST**

FullFlex induction hob with integrated hood

MultiSlider

Autolock

Power

Power Plus

Easy installation

Flex

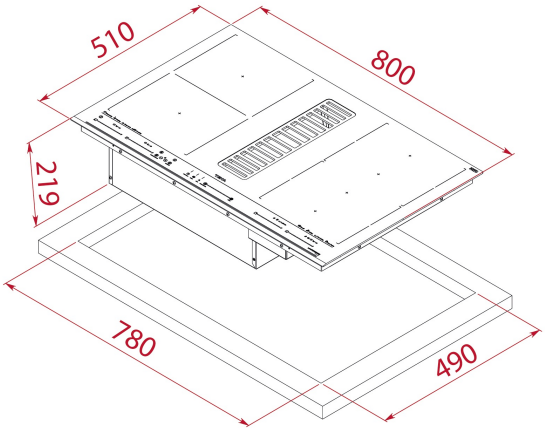

REFERENCE

REF: 112730000 EAN: 8434778024982

FEATURES

Induction hob with integrated hood
Automatic hood activation
Direct functions: Confit, poach, grilling, pan frying, deep frying, slimmering, melting
Touch control multiSlider
4 cooking zones
Ceramic glass surface
Auto-lock safety system
Cooking timer
Power Plus
Child lock
Residual heat indicator
Power management
Easy installation kit
Maximum nominal power: 7200 (IH) + 200 (AH)
Optional: Teppanyaki and grilling plate
FreshAir function
Brushless EcoPower Motor
9 speeds
Intensive speed sound level (dBA): 66
Max speed sound level (dBA): 65
Min speed sound level (dBA): 43
2 aluminium filters with 12 layers
Stop delay timer
Filter saturation indicator

DIMENSIONS

Product height (mm): 219
Product width (mm): 800
Product depth (mm): 510
Product length (mm):
Net weight (Kg): 25

TECHNICAL DETAILS

Power rate (V): 220-240
Frequency (Hz): 50/60
Maximum Nominal Power (W): 7200 (IH) + 200 (AH)

COLOURS

112730000 Black