OVAL 915
Single lever kitchen tap with oval body and 1/2" flexible inlet pipes

Anti-scale aerator

Swivel spout

Easy installation

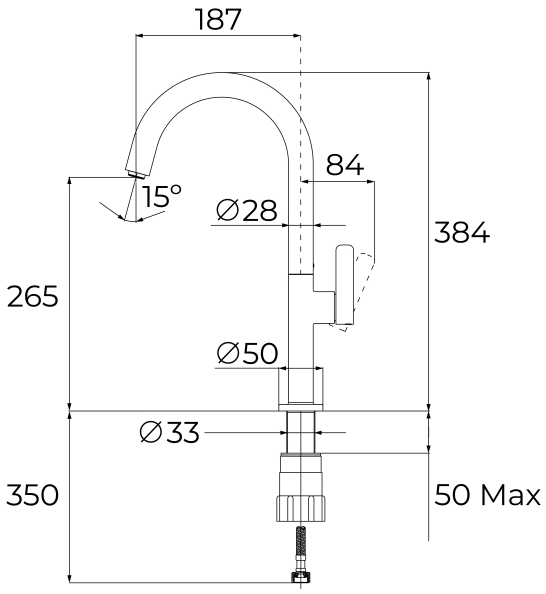

REFERENCE

REF: 116030063 EAN: 8434778027136

FEATURES

Oval Series
High spout kitchen tap
Slim elegant design
Swivel spout 360º
Anti-scale aerator with coin slot (no tools required)
Waterflow limited to 5 l/min
Cartridge with ceramic discs of high resistance
Cartridge diameter: 28 mm
Spout diameter: 28 mm
Highly precise temperature control
Greater handling sensitivity with smoother movements
Easy-Quick fixation system
1/2" flexible inlet pipes

DIMENSIONS

Product height (mm): 384
Product width (mm):
Product depth (mm):
Product length (mm):
Net weight (Kg): 1,07

COLOURS

116030063 Chrome
116030062 Black
116030062 Chrome