# **HLB 8600 P** A+ Multifunction-Surround Pyrolytic Oven with 20 recipes

70L | DualClean | Full Extension Telescopic Guide | HydroClean | Pyrolysis | SoftClose | SurroundTemp

| | |
|---|---|
| **DESCRIPTION** | A+ Multifunction-Surround Pyrolytic Oven with 20 recipes |
| **LIFE STYLE** | Maestro |
| **COLOURS** | |
| **REFERENCE** | REF. 111000015<br>EAN. 8434778008319 |

# HLB 8600 P

**FEATURES**

Urban Colors Edition
Multifunction SurroundTemp oven
12 cooking functions
Pyrolysis self-cleaning system and automatic HydroClean system
Touch control display with knob
Personal cooking assistant: 20 automatic programs
Chrome supports with 5 cooking levels
Full extension telescopic guides
Easy slide telescopic guides
Removable quadruple glazed door
SoftClose system
Children safety lock
Automatic disconnection safety system
Automatic quick preheating
Anti-tip deep tray and reinforced grid
Capacity (gross/net): 71 / 70 litres

# HLB 8600 P

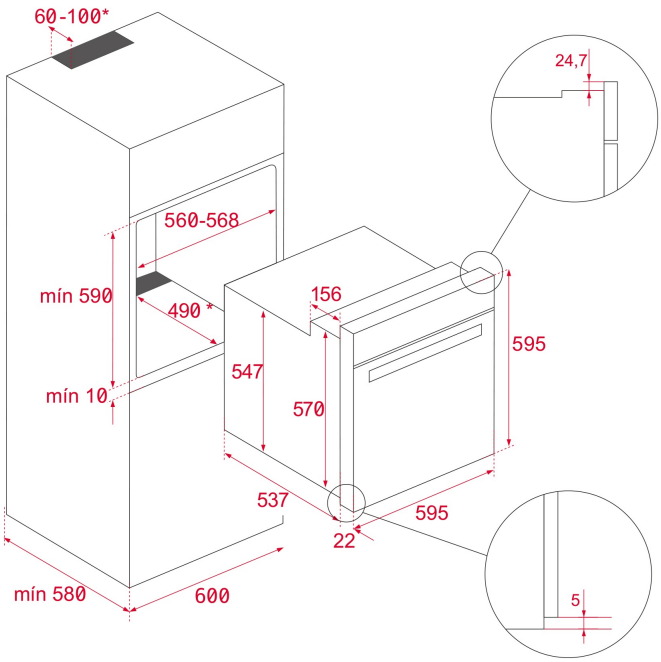


## DIMENSIONS

**Product height (mm):** 595
**Product width (mm):** 595
**Product depth (mm):** 537+22
**Product length (mm):**
**Net weight (Kg):** 37

## TECHNICAL DETAILS

### FEATURES

**Certificates:** N / CE / CCA / CB
**Number of cavities:** 1
**Type of inner light:** Halogen
**Inside light position:** RIGHT TOP CORNER
**Enamelled cavity:** Yes
**Min. Temperature Regulator (ºC):** 30
**Max. Temperature Regulator (ºC):** 270
**Function selector:** ELECTRONIC
**Number of cooking functions:** 12
**Number of recipes:** 20
**Top + Bottom function:** Yes
**Grill + Bottom function:** Yes
**Grill function:** Yes
**MaxiGrill function:** Yes
**Top + Bottom + Fan function:** Yes
**Bottom function:** Yes
**Bottom + TURBO (Pizza) function:** Yes
**Turbo function:** Yes
**ECO function:** Yes
**Ferment function:** Yes
**Automatic quick heating:** Yes
**Slow Cook:** Yes

**Knobs type:** MMX FIX ROTATIVE SS
**Removable chromed tray guides:** Yes
**Number of guide levels:** 5
**Full extension telescopic guides:** Yes
**Easy slide telescopic guides:** Yes
**SoftClose:** Yes

## ELECTRIC CONNECTION

**Maximum Nominal Power (W):** 3552
**Frequency (Hz):** 50/60
**Power rate (V):** 220-240
**Cable Connection Length (cm):** 150
**Plug:** Yes
**Inside light Consumption (W):** 25

## ENERGY CONSUMPTION

**Energy consumption per cycle in conventional mode (kWh):** 0.87
**Energy consumption per cycle in fan-forced convection mode (kWh):** 0,68
**Bottom Heating Element (W):** 1050
**Grill (W):** 1400
**Maxi Grill (W):** 2450
**Traditional (W):** 2450
**Turbo (W):** 2000
**Multifunction Turbo (W):** 25
**Cooling Fan Motor (W):** 30

## SAFETY SYSTEMS

**Automatic disconnection when opening the door:** Yes
**Panel blocking system:** Yes
**Children safety block option:** Yes
**Grill protection:** Yes
**Anti-tip tray system:** Yes
**Safety Thermostat:** Yes

## CLEANING SYSTEM

**Crystal Clean Enamel (Slippery):** Yes
**Hydroclean PRO:** Yes
**Pyrolytic:** Yes
**DualClean:** Yes

## ACCESSORIES

**Deep Tray (50 mm):** 1
**Steak tray:** 0
**Reinforced grid:** 1

## ENERGY EFFICIENCY

**Energy Efficiency Class:** A+
**Energy Efficiency Index (EEI):** 81

# HLB 8600 P
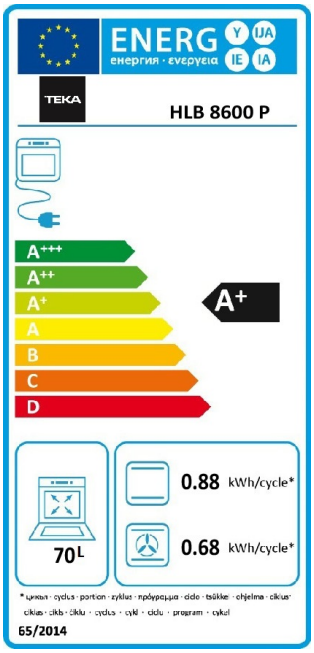
## ENERGY LABEL