DFS 46710 WH 60 cm free standing dishwasher ExpertCare Series with 14 place settings and 7 washing programs

Eco Function

Extra Dry function

Water dirtiness sensor Aqualogic

DESCRIPTION	60 cm free standing dishwasher ExpertCare Series with 14 place settings and 7 washing programs
LIFE STYLE	Maestro
COLOURS	
REFERENCE	REF. 114270015 EAN. 8434778013801

DFS 46710 WH

FEATURES

ExpertCare series
Free standing Dishwasher
Electronic control panel with display
Capacity: 14 plate settings
Washing programs: 7
Washing temperatures: 45°, 55°, 60°, 65°, 70° C
SmartSensor measure the level of dirtiness
MultiCleaner Sensor
FlexiSet 2 lower basket
Special programs: AutoClean, AutoProgram, Intensive program, ECO program, 1-Hour, Whisper program, PreWash
Special functions: Half load, Express, ExtraDry
AquaSafe safety system
Low salt and rinse indicator
Adjustable upper basket
Delay timer: 1-24 hours
Noise level: 47 dBA
Sliding Detergent drawer
Column installation

DFS 46710 WH

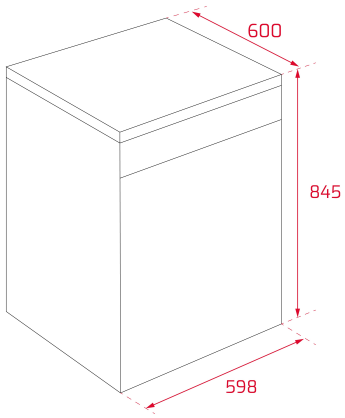

DIMENSIONS

Product height (mm): 845
Product width (mm): 598
Product depth (mm): 600
Product length (mm):
Net weight (Kg): 41,32

TECHNICAL DETAILS

PRODUCT SHEET

Capacity (Place Settings): 14
Energy consumption (kWh/year): 266
Power consumption (Kwh): 0,937
Water consumption (litres/year): 3080
Water consumption (litres): 11
Standard program: ECO
Standard cycle duration (minutes): 220
Noise level (dB): 47
Certificates: GS;CE;EMC;LVD;CB

POWER SUPPLY

Frequency (Hz): 50
Power rate (V): 220
Plug type: EU
Cable Connection Length (cm): 150
Maximum Nominal Power (W): 2100
Power of heating element (W): 1800
Water outlet hose length (m): 1.38
Water inlet hose length (m): 1.5

FEATURES

Type of installation: Free standing
Control panel: Electronic buttons
Control panel display: Yes
Number of programs: 7
Number Of Washing Temperatures: 5
Aqua-Logic: Yes
Water softener: Yes
Microfilter: Yes
Installation in column: Yes

SAFETY SYSTEMS

Internal Leakage Control: Yes
Child lock: Yes

CONTROL INDICATOR LIGHTS

Low Salt Aid indicator: Yes
Low Rinse Aid indicator: Yes
Selected program indicator: Yes
Remaining time: Yes
End of program acoustic alarm: Yes
End of program visual alarm: Yes

SPECIAL FUNCTIONS

Soak/Prewash program: Yes
1 Hour program: Yes
Economic program: Yes
Intense program: Yes
Half load: Yes
Delayed Timer (h): 1-24 HOURS

DFS 46710 WH
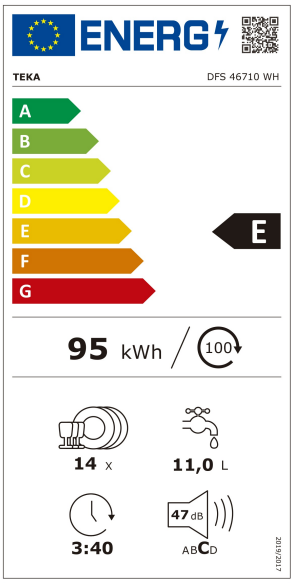
ENERGY LABEL