GZC 95320 XBN 90cm Gas on Glass Hob with ExactFlame function of natural gas

Integrated auto-ignition system

Autolock

ExactFlame with 9 power levels

Easy installation system

DESCRIPTION	90cm Gas on Glass Hob with ExactFlame function of natural gas
COLOURS	
REFERENCE	REF. 112570064 EAN. 8434778006889

GZC 95320 XBN

FEATURES

Gas on Glass with ExactFlame and bevelled front
Front control knobs with ergonomic design
Ceramic glass surface
9 power levels with precise control of the flame
1 double ring burner, 5,00 kW
1 fast burner, 2,80kW
2 semi-fast burners, 1,75 kW
1 auxiliary burner, 1,00 kW
Auto-lock safety device (Thermocouples)
Automatic-ignition in every burner, activated through control knobs
Optional Wok support
Large cast iron pan grids
Easy installation kit
Type of Gas: Natural

GZC 95320 XBN

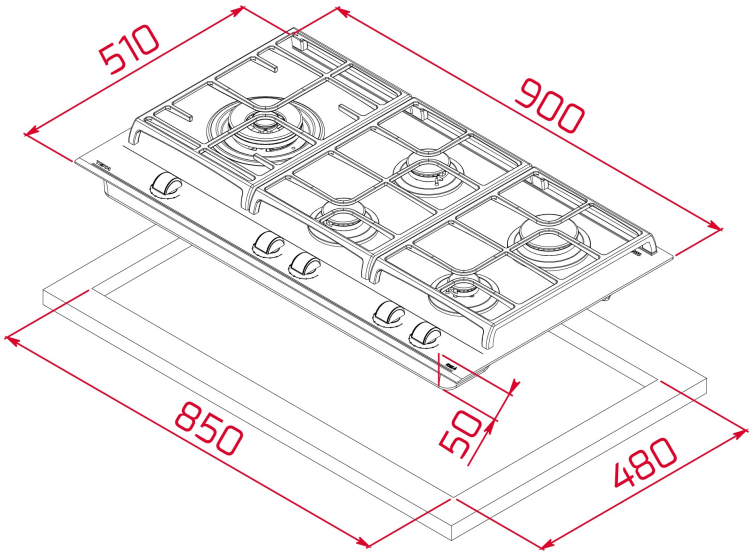

DIMENSIONS

Product height (mm): 98
Product width (mm): 900
Product depth (mm): 510
Product length (mm):
Net weight (Kg): 16,5

TECHNICAL DETAILS

FITTING MEASURES	**Built-in Width (mm):** 850 **Built-in Depth (mm):** 480 **Built-in height (mm):** 49
FEATURES	**Gas type:** Natural **Maximum nominal power (W) (Gas):** 10950 **Autoignition:** Yes **Number of electric power levels:** 9
ELECTRIC CONNECTION	**Frequency (Hz):** 50/60 **Power rate (V):** 220-240 **Cable Connection Length (cm):** 100 **Maximum Nominal Power (W) (Electric hob):** 1100
COOKING ZONES	**Cooking Zones:** 5

SAFETY SYSTEMS	**Automatic safety disconnection (Auto Lock) (Gas):** Yes **Automatic safety disconnection (Auto Lock) (Electric hob):** Yes
FINISH	**Surface finishing:** Front bevelled glass **Surface type:** Ceramic Glass (4mm) **Easy installation system:** Yes
ACCESSORIES	**Grid type:** Full Grid **Wok support:** Optional **Junction Kit:** Optional **Cast Iron Grids:** Yes **Teppan Yaki:** NO