IZ 6320 60cm Induction Hob with 3 zones and MultiSlider Touch Control

MultiSlider, for independant control of each cooking zone

Autolock

Power function

Power Plus function

Easy installation system

DESCRIPTION	60cm Induction Hob with 3 zones and MultiSlider Touch Control
LIFE STYLE	Total
COLOURS	
REFERENCE	REF. 10210206 EAN. 8421152155707

IZ 6320

FEATURES

Urban Colors Edition
Induction hob
Touch Control Multislider
Cooking timer
3 induction zones:
1 induction Ø145 mm
1 induction Ø210 mm
1 induction Ø190/300 mm
Special cooking functions: Quick Boiling, Melting, Simmering and KeepWarm
Power Plus function
Child lock
Stop & Go function
Silence mode
Fast-Click easy installation
Maximum nominal power: 7.400 W

IZ 6320

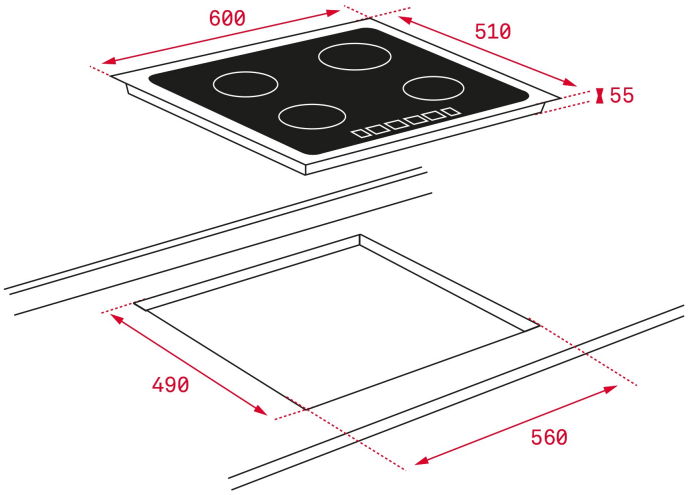

DIMENSIONS

Product height (mm): 50
Product width (mm): 600
Product depth (mm): 510
Product length (mm):
Net weight (Kg): 10,44

TECHNICAL DETAILS

FITTING MEASURES	**Built-in Width (mm):** 560 **Built-in Depth (mm):** 490 **Built-in height (mm):** 50
FEATURES	**Number of electric power levels:** 9 **Simmering:** Yes **Melting:** Yes **Keeping warm:** Yes **Power management function:** Yes
ELECTRIC CONNECTION	**Frequency (Hz):** 50/60 **Power rate (V):** 220-240 **Cable Connection Length (cm):** 110 **Maximum Nominal Power (W) (Electric hob):** 7400
COOKING ZONES	**Cooking Zones:** 3 **Energy consumption for the whole hob, Wh/Kg:** 184

SAFETY SYSTEMS	**Residual heat indicator (Gas):** Yes **Residual heat indicator (Electric hob):** Yes **Automatic safety disconnection (Auto Lock) (Electric hob):** Yes **Safety Blocking:** Yes **Child lock:** Yes
FINISH	**Surface finishing:** Front bevelled glass **Surface type:** Ceramic Glass (4mm) **Easy installation system:** Yes
ACCESSORIES	**Junction Kit:** Optional **Teppan Yaki:** Optional